OFFICE OF THE ASSISTANT SECRETARY OF DEFENSE
HEALTH AFFAIRS

16401 EAST CENTRETECH PARKWAY
AURORA, COLORADO 80011-9066

TRICARE
MANAGEMENT ACTIVITY

MB&RB

CHANGE 88
6010.55-M
DECEMBER 22, 2008

PUBLICATIONS SYSTEM CHANGE TRANSMITTAL FOR TRICARE REIMBURSEMENT MANUAL (TRM)

The TRICARE Management Activity has authorized the following addition(s)/ revision(s) to the 6010.55-M, issued August 2002.

CHANGE TITLE: **TRICARE OUTPATIENT PROSPECTIVE PAYMENT SYSTEM (OPPS) UPDATE FOR CALENDAR YEAR (CY) 2008**

PAGE CHANGE(S): See pages 2 and 3.

SUMMARY OF CHANGE(S): This change incorporates all of the TRICARE OPPS changes for CY 2008; i.e., those CMS/Medicare changes adopted as part of the maintenance and updating up through December 31, 2008.

EFFECTIVE AND IMPLEMENTATION DATE: May 1, 2009.

This change is made in conjunction with Aug 2002 TOM, Change No. 74 and Aug 2002 TPM, Change No. 91.

Marty Maher
for **Reta Michak**
Chief, Office of Medical Benefits and Reimbursement Branch

ATTACHMENT(S): 154 PAGE(S)
DISTRIBUTION: 6010.55-M

WHEN PRESCRIBED ACTION HAS BEEN TAKEN, FILE THIS TRANSMITTAL WITH BASIC DOCUMENT

REMOVE PAGE(S)	INSERT PAGE(S)
CHAPTER 1	
Table of Contents, pages i and ii	Table of Contents, pages i and ii
Section 16, pages 1 through 4	Section 16, pages 1 through 4
Section 24, pages 1 and 2	Section 24, pages 1 and 2
CHAPTER 2	
Addendum A, pages 5 and 6	Addendum A, pages 5 and 6
CHAPTER 3	
Section 1, pages 7 through 13	Section 1, pages 7 through 13
Section 2, pages 5 and 6	Section 2, pages 5 and 6
CHAPTER 4	
Section 3, pages 13 and 14	Section 3, pages 13 and 14
CHAPTER 5	
Section 3, pages 3 through 6	Section 3, pages 3 through 7
CHAPTER 7	
Table of Contents, pages i and ii	Table of Contents, pages i and ii
Section 2, pages 1 through 3	Section 2, pages 1 through 3
Addendum B, page 1	Addendum B, page 1
CHAPTER 9	
Table of Contents, page i	Table of Contents, page i
Section 1, pages 1 through 8	Section 1, pages 1 through 8
Addendum A, pages 1 through 75	★ ★ ★ ★ ★ ★
Addendum B, pages 1 through 68	★ ★ ★ ★ ★ ★
CHAPTER 13	
Table of Contents, pages i and ii	Table of Contents, pages i through iii
Section 1, pages 1 through 14	Section 1, pages 1 through 14

REMOVE PAGE(S)	INSERT PAGE(S)
Section 2, pages 1 through 22	Section 2, pages 1 through 30
Section 3, pages 1 through 45	Section 3, pages 1 through 48
Section 4, pages 1 through 3	Section 4, pages 1 through 3
Section 5, page 1	Section 5, page 1
Addendum A1, page 1	Addendum A1, page 1
Addendum A2, page 1	Addendum A2, page 1
★ ★ ★ ★ ★ ★	Addendum A3, pages 1 and 2
INDEX	
pages 1, 2, 7, 8, 13 through 16, 19 and 20	pages 1, 2, 7, 8, 13 through 16, 19 and 20

CHAPTER 1

GENERAL

SECTION	SUBJECT
1	Network Provider Reimbursement
2	Accommodation Of Discounts Under Provider Reimbursement Methods
3	Claims Auditing Software
4	Reimbursement In Teaching Setting
5	National Health Service Corps Physicians Of The Public Health Service
6	Reimbursement Of Physician Assistants, Nurse Practitioners, And Certified Psychiatric Nurse Specialists
7	Reimbursement Of Covered Services Provided By Individual Health Care Professionals And Other Non-Institutional Health Care Providers
8	Economic Interest In Connection With Mental Health Admissions
9	Anesthesia
10	Postoperative Pain Management
11	Durable Medical Equipment Claims: Prosthetics, Orthotics, And Supplies (DMEPOS)
12	Oxygen And Related Supplies
13	Laboratory Services
14	Ambulance Services
15	Legend Drugs And Insulin
16	Surgery
17	Assistant Surgeons
18	Professional Services: Obstetrical Care
19	Charges For Provider Administrative Expenses
20	State Agency Billing
21	Hospital Reimbursement - Billed Charges Set Rates
22	Hospital Reimbursement - Other Than Billed Charges
23	Hospital Reimbursement - Payment When Only SNF Level Of Care Is Required

SECTION	SUBJECT
24	Hospital Reimbursement - Outpatient Services For All Services On Or Before May 1, 2009 (Implementation Of OPPS), And Thereafter, For Services Not Otherwise Reimbursed Under Hospital OPPS
25	Preferred Provider Organization (PPO) Reimbursement
26	Supplemental Insurance
27	Legal Obligation To Pay
28	Reduction Of Payment For Noncompliance With Utilization Review Requirements
29	Reimbursement Of Emergency Inpatient Admissions To Unauthorized Facilities
30	Reimbursement Of Certain Prime Travel Expenses
31	Newborn Charges
32	Hospital-Based Birthing Room
33	Bonus Payments In Health Professional Shortage Areas (HPSA) And In Physician Scarcity Areas (PSA)
34	Hospital Inpatient Reimbursement In Locations Outside The 50 United States And The District Of Columbia
	FIGURE 1-34-1 Country Specific Index Factors - 2008
	FIGURE 1-34-2 Institutional Inpatient Diagnostic Groupings For Specified Locations Outside The 50 United States And The District Of Columbia - National Inpatient Per Diem Amounts - 2008
35	Professional Provider Reimbursement In Specified Locations Outside The 50 United States And The District Of Columbia
	FIGURE 1-35-1 Country Specific Index Factors - 2008
ADDENDUM A	Sample State Agency Billing Agreement
ADDENDUM B	Figures
	FIGURE 1-B-1 Suggested Wording To The Beneficiary Concerning Rental vs. Purchase Of DME

CHAPTER 1
SECTION 16

SURGERY

ISSUE DATE: August 26, 1985
AUTHORITY: 32 CFR 199.4(c)(2)(i), (c)(2)(ii), (c)(3)(i), (c)(3)(iii), and (c)(3)(iv)

I. APPLICABILITY

Paragraphs III.A. through G. apply to reimbursement of services provided by network and non-network providers. Paragraphs III.H. and I. apply only to non-network providers.

II. ISSUE

How is surgery to be reimbursed?

III. POLICY

A. Multiple Surgery and Discounting Reimbursement.

1. The following rules are to be followed whenever there is a terminated procedure or more than one surgical procedure performed during the same operative or outpatient session. This applies to those facilities that are exempt from the hospital Outpatient Prospective Payment System (OPPS) and for claims submitted by individual professional providers for services rendered on or after May 1, 2009 (implementation of OPPS):

a. Discounting for Multiple Procedures.

(1) When more than one surgical procedure code subject to discounting (see Chapter 13, Section 3) is performed during a single operative or outpatient session, TRICARE will reimburse the full payment and the beneficiary will pay the cost-share/copayment for the procedure having the highest payment rate.

(2) Fifty percent (50%) of the usual payment amount and beneficiary copayment/cost-share amount will be paid for all other procedures subject to discounting (see Chapter 13, Section 3) performed during the same operative or outpatient session to reflect the savings associated with having to prepare the patient only once and the incremental costs associated with anesthesia, operating and recovery room use, and other services required for the second and subsequent procedures.

(a) The reduced payment would apply only to the surgical procedure with the lower payment rate.

(b) The reduced payment for multiple procedures would apply to both the beneficiary copayment/cost-share and the TRICARE payment.

b. Discounting for Bilateral Procedures.

NOTE: Bilateral codes can be surgical and non-surgical.

(1) Following are the different categories/classifications of bilateral procedures:

(a) Conditional bilateral (i.e., procedure is considered bilateral if the modifier 50 is present).

(b) Inherent bilateral (i.e., procedure in and of itself is bilateral).

(c) Independent bilateral (i.e., procedure is considered bilateral if the modifier 50 is present, but full payment should be made for each procedure (e.g., certain radiological procedures).

(2) Terminated bilateral procedures or terminated procedures with units greater than one should not occur. Line items with terminated bilateral procedures or terminated procedures with units greater than one are denied.

(3) Inherent bilateral procedures will be treated as a non-bilateral procedure since the bilateralism of the procedure is encompassed in the code.

(4) The above bilateral procedures will be discounted based on the application of discounting formulas appearing in Chapter 13, Section 3, paragraph III.A.5.c.(6) and (7).

c. Modifiers for Discounting Terminated Surgical Procedures.

(1) Industry standard modifiers may be billed on outpatient hospital or individual professional claims to further define the procedure code or indicate that certain reimbursement situations may apply to the billing. Recognition and utilization of modifiers are essential for ensuring accurate processing and payment of these claim types.

(2) Industry standard modifiers are used to identify surgical procedures which have been terminated prior to and after the delivery of anesthesia.

(a) Modifiers 52 and 73 are used to identify a surgical procedure that is terminated prior to the delivery of anesthesia and is reimbursed at 50% of the allowable; i.e., the Ambulatory Surgery Center (ASC) tier rate, the Ambulatory Payment Classification (APC) allowable amount for OPPS claims, or the CHAMPUS Maximum Allowable Charge (CMAC) for individual professional providers.

(b) Modifiers 53 and 74 are used for terminated surgical procedures after delivery of anesthesia which are reimbursed at 100% of the appropriated allowable amounts referenced above.

2. Exceptions to the above policy prior to implementation of the hospital OPPS, are:

a. If the multiple surgical procedures involve the fingers or toes, benefits for the third and subsequent procedures are to be limited to 25% to the prevailing charge.

b. Incidental procedures. No reimbursement is to be made for an incidental procedure.

3. Separate payment is not made for incidental procedures. The payment for those procedures are packaged within the primary procedure with which they are normally associated.

4. Data which is distorted because of these multiple surgery procedures (e.g., where the sum of the charges is applied to the single major procedure) must not be entered into the data base used to develop allowable charge profiles.

5. The OPPS inpatient only list shall apply to OPPS, non-OPPs, and professional providers. Refer to Chapter 13, Section 2, paragraph III.D. The inpatient only list is available on TMA's web site at http://www.tricare.mil/inpatientprocedures.

B. Multiple Primary Surgeons. When more than one surgeon acts as a primary surgeon for multiple procedures during the same operative session, the services of each may be covered.

C. Assistant Surgeons. See Chapter 1, Section 17.

D. Pre-Operative Care. Pre-operative care rendered in a hospital when the admission is expressly for the surgery is normally included in the global surgery charge. The admitting history and physical is included in the global package. This also applies to routine examinations in the surgeon's office where such examination is performed to assess the beneficiary's suitability for the subsequent surgery.

E. Post-Operative Care. All services provided by the surgeon for post-operative complications (e.g., replacing stitches, servicing infected wounds) are included in the global package if they do not require additional trips to the operating room. All visits with the primary surgeon during the 90 day period following major surgery are included in the global package.

NOTE: This rule does not apply if the visit is for a problem unrelated to the diagnosis for which the surgery was performed or is for an added course of treatment other than the normal recovery from surgery. For example, if after surgery for cancer, the physician who performed the surgery subsequently administers chemotherapy services, these services are not part of the global surgery package.

F. Re-Operations for Complications. All medically necessary return trips to the operating room, for any reason and without regard to fault, are covered.

G. Global Surgery for Major Surgical Procedures. Physicians who perform the entire global package which includes the surgery and the pre- and post-operative care should bill

for their services with the appropriate CPT code only. Do not bill separately for visits or other services included in this global package. The global period for a major surgery includes the day of surgery. The pre-operative period is the first day immediately before the day of surgery. The post-operative period is the 90 days immediately following the day of surgery. If the patient is returned to surgery for complications on another day, the post-operative period is 90 days immediately after the last operation.

H. Second Opinion.

1. Claims for patient-initiated, second-physician opinions pertaining to the medical need for surgery may be paid. Payment may be made for the history and examination of the patient as well as any other covered diagnostic services required in order for the physician to properly evaluate the patient's condition and render a professional opinion on the medical need for surgery.

2. In the event that the recommendations of the first and second physician differ regarding the medical need for such surgery, a claim for a patient-initiated opinion from a third physician is also reimbursable. Such claims are payable even though the beneficiary has the surgery performed against the recommendation of the second (or third) physician.

I. In-Office Surgery. Charges for a surgical suite in an individual professional provider's office, including charges for services rendered by other than the individual professional provider performing the surgery and items directly related to the use of the surgical suite, may not be cost-shared unless the suite is an approved ambulatory surgery center.

J. On May 1, 2009 (implementation of OPPS), surgical procedures will be discounted in accordance with the provisions outlined in Chapter 13, Section 3, paragraph III.A.5.b. and c.

- END -

CHAPTER 1
SECTION 24

HOSPITAL REIMBURSEMENT - OUTPATIENT SERVICES FOR ALL SERVICES ON OR BEFORE MAY 1, 2009 (IMPLEMENTATION OF OPPS), AND THEREAFTER, FOR SERVICES NOT OTHERWISE REIMBURSED UNDER HOSPITAL OPPS

ISSUE DATE: March 10, 2000
AUTHORITY: 32 CFR 199.14(a)(3) and (a)(5)

I. APPLICABILITY

This policy is mandatory for reimbursement of services provided by either network or non-network providers. However, alternative network reimbursement methodologies are permitted when approved by the TRICARE Management Activity (TMA) and specifically included in the network provider agreement.

II. ISSUE

How are outpatient hospital services to be reimbursed for all services prior to implementation of Outpatient Prospective Payment System (OPPS), and thereafter, for services performed in facilities that are not subject to the hospital OPPS?

III. POLICY

A. When professional services or diagnostic tests (e.g., laboratory, radiology, EKG, EEG) that have CHAMPUS Maximum Allowable Charge (CMAC) pricing (Chapter 5, Section 3) are billed, the claim must have the appropriate CPT coding and modifiers, if necessary. Otherwise, the service shall be denied. If only the technical component is provided by the hospital, the technical component of the appropriate CMAC shall be used.

B. For all other services, payment shall be made based on allowable charges when the claim has HCPCS (Level I, II, III) coding information (these may include ambulance, durable medical equipment (DME) and supplies, drugs administered other than oral method, and oxygen and related supplies). For claims development, see TRICARE Operations Manual (TOM), Chapter 8, Section 6. Other services without allowable charges, such as facility charges, shall be paid as billed. For reimbursing drugs administered other than oral method, see Chapter 1, Section 15, paragraph E.

C. When coding information is provided, outpatient hospital services including emergency and clinical services, clinical laboratory services, rehabilitation therapy, venipuncture, and radiology services are paid using existing allowable charges. Such services are reimbursed under the allowable charge methodology that would also include the

CMAC rates. In addition, venipuncture services provided on an outpatient basis by institutional providers other than hospitals are also paid on this basis. Professional services billed on a CMS 1450 UB-04 will be paid at the professional CMAC if billed with the professional service revenue code and enough information to identify the rendering provider.

D. Freestanding Ambulatory Surgical Center (ASC) services are to be reimbursed in accordance with Chapter 9, Section 1.

E. Outpatient hospital services including professional services, provided in the state of Maryland are paid at the rates established by the Maryland Health Services Cost Review Commission (HSCRC). Since hospitals are required to bill these rates, reimbursement for these services is to be based on the billed charge.

F. Surgical outpatient procedures which are not otherwise reimbursed under the hospital OPPS will be subject to the same multiple procedure discounting guidelines and modifier requirements as prescribed under OPPS for services rendered on or after implementation of OPPS. Refer to Chapter 1, Section 16, paragraph III.A.1.a. through c. and Chapter 13, Section 3, paragraph III.A.5.b. and c. for further detail.

G. Industry standard modifiers and condition codes may be billed on outpatient hospital claims to further define the procedure code or indicate that certain reimbursement situations may apply to the billing. Recognition and utilization of modifiers are essential for ensuring accurate processing and payment of these claims.

- END -

IV. OUTPATIENT SERVICES (Continued)

BENEFICIARY COPAYMENT/COST-SHARE (SEE POINT OF SERVICE)					
TRICARE BENEFITS	TRICARE PRIME PROGRAM (SEE NOTE 8.)			TRICARE EXTRA PROGRAM	TRICARE STANDARD PROGRAM
TYPE OF SERVICE (SEE NOTE 10.)	ADFMs		RETIREES, THEIR FAMILY MEMBERS & SURVIVORS		
	E1 - E4	E5 & ABOVE			
HOME HEALTH CARE Part-time or intermittent skilled nursing and home health aide services, physical, speech, & occupational therapy, medical social services, routine and non-routine medical services. NOTE: DME, osteoporosis drugs, pneumoccocal pnuemonia, influenza virus and hepatitis B vaccines, oral cancer drugs, antiemetic drugs, orthotics, prosthetics, enterral and parenteral nutritional therapy and drugs/biologicals administered by other than oral methods are services that can be paid in addition to the prospective payment amount subject to applicable copayment/ cost-sharing and deductible amounts.	$0 copayment.	$0 copayment.	$0 copayment.	$0 cost-share.	$0 cost-share.
HOSPICE CARE NOTE: A separate cost-share may be (optional) collected by the individual hospice for outpatient drugs and biologicals and inpatient respite care.					

IV. OUTPATIENT SERVICES (Continued)

BENEFICIARY COPAYMENT/COST-SHARE (SEE POINT OF SERVICE)					
TRICARE BENEFITS	TRICARE PRIME PROGRAM (SEE NOTE 8.)			TRICARE EXTRA PROGRAM	TRICARE STANDARD PROGRAM
TYPE OF SERVICE (SEE NOTE 10.)	ADFMs		RETIREES, THEIR FAMILY MEMBERS & SURVIVORS		
	E1 - E4	E5 & ABOVE			
FAMILY HEALTH SERVICES Family planning and well baby care (up to 24 months of age). The exclusions listed in this Policy Manual will apply.	$0 copayment per visit.	$0 copayment per visit.	$12 copayment per visit. (See Note 4.)	**Active Duty Family Members:** Cost-share--15% of the fee negotiated by the contractor. **Retirees, their Family Members & Survivors:** Cost-share--20% of the fee negotiated by the contractor.	**Active Duty Family Members:** Cost-share--20% of the allowable charge. **Retirees, their Family Members & Survivors:** Cost-share--25% of the allowable charge.
OUTPATIENT MENTAL HEALTH TO INCLUDE HOME One hour of therapy, no more than two times each week (when medically necessary).	$0 copayment per visit.	$0 copayment per visit.	$25 copayment for individual visits. $17 copayment for group visits.		
PRESCRIPTION DRUGS See Addendum B.					
NOTE 6: If medically necessity is established for a non-formulary drug, patients may qualify for the $9 copayment for up to a 30-day supply in the TRRx or a 90-day supply in the TMOP program.					
AMBULATORY SURGERY (same day) **ALL SURGICAL PROCEDURES REGARDLESS OF WHERE THEY ARE PERFORMED** With the exclusion of those surgical procedures referenced in Chapter 2, Section 1, paragraph I.B.5.e. and f.	$0 copayment per visit.	$0 copayment per visit.	$25 copayment No separate copayment/ cost-share for separately billed professional charges.	**ADFMs:** Cost-share--$25. for Ambulatory Surg. **Retirees, their Family Members & Survivors:** Cost-share --20% of the institutional fee negotiated by the contractor.	**ADFMs:** $25. **Retirees, their Family Members & Survivors:** Lesser of 25% of group rate or 25% of billed charge.
BIRTHING CENTER Prenatal care, outpatient delivery, and postnatal care provided by TRICARE authorized birthing center.	$0 copayment.	$0 copayment.	$25 copayment.	**ADFMs:** $25. **Retirees, their Family Members & Survivors:** Cost-share --20% of the fee negotiated by the contractor.	**ADFMs:** $25. **Retirees, their Family Members & Survivors:** Lesser of 25% of birthing center rate or 25% of billed charge.

d. The conversion factors calculated for any profile year shall reflect prevailing charges calculated on the basis of charge data for the applicable profile year. Also, prevailing charges established through the use of a relative value scale and conversion factors, in effect, consist of two components. Consequently, the conversion factors used must be recalculated when there is an extensive change in the relative value units assigned to procedures (as may occur if the contractor begins to use a different or updated relative value scale but not if the unit value of a single procedure is changed) in order to ensure that the change(s) in unit values do not change resultant conversion factors.

e. Since conversion factors are a calculated amount and will only be used when multiplied by a relative value, conversion factors are to be rounded only to the nearest whole cent. It will not be acceptable to round to the nearest dollar or tenth dollar (dime).

E. Procedure Codes. The CPT[2] Coding System includes Level I: CPT Codes and Level II: Alpha Character and TMA approved codes for retail and mail order pharmacy. (Reference the TRICARE Systems Manual (TSM), Chapter 2, Addendum E and F.)

F. Professional surgical procedures will be subject to the same multiple procedure discounting guidelines and modifier requirements as prescribed under the Outpatient Prospective Payment System (OPPS) for services rendered on or after May 1, 2009 (implementation of OPPS). Refer to Chapter 1, Section 16, paragraph III.A.1.a. through c. and Chapter 13, Section 3, paragraph III.A.5.b. and c. for further detail.

G. Professional procedures which are terminated or are bilateral will be subject to discounting based on modifier guideline requirements as prescribed under the OPPS for services rendered on or after May 1, 2009 (implementation of OPPS). Refer to Chapter 1, Section 16, paragraph III.A.1.a. through c. and Chapter 13, Section 3, paragraph III.A.5.b. and c. for further detail.

H. Prevention Of Gross Dollar Errors. Parameters Consistent With Private Business. The contractor shall establish procedures for the review and authorization of payment for all claims exceeding a predetermined dollar amount. These authorization schedules shall be consistent with the contractor's private business standards.

I. Industry standard modifiers and condition codes may be billed on individual professional claims to further define the procedure code or indicate that certain reimbursement situations may apply to the billing. Recognition and utilization of modifiers are essential for ensuring accurate processing and payment of these claims.

III. ALLOWABLE CHARGE METHOD: APPLICATION

A. Durable Medical Equipment (DME), Durable Equipment (DE), And Supplies. Also, see Chapter 1, Section 11 and the TRICARE Policy Manual (TPM), Chapter 8, Section 2.1.

B. Physician Assistant Services. The allowable charge for physician assistant services is determined in accordance with the provisions of Chapter 1, Section 6, and is based on a

[2] CPT only © 2006 American Medical Association (or such other date of publication of CPT). All Rights Reserved.

percentage of the allowed charge for the service when performed by the employing physician. Only the employing physician may bill for physician assistant services. Physician assistants' billed and allowed charges must be excluded from calculation of physician profiles. Payment is made to the employing physician who is an authorized TRICARE provider.

C. Teaching Physicians. Payment for services of teaching physicians may be made on an allowable charge basis only if an attending physician relationship has been established between the teaching physician and the patient. Refer to Chapter 1, Section 4 for a full explanation of applicable prerequisites.

IV. ALTERNATIVE REIMBURSEMENT METHODS FOR NON-NETWORK PROVIDERS

The contractor, with the concurrence of the Executive Director, TMA (or a designee), may, subject to the approval of the ASD(HA), establish an alternative method of reimbursement designed to produce reasonable control over health care costs and to assure a high level of acceptance of the TRICARE-determined charge by the individual health care professionals or other non-institutional health care providers furnishing services and supplies to TRICARE beneficiaries. Alternative methods shall not result in reimbursement greater than under the allowable charge method above, nor result in a higher cost for the affected beneficiary population.

V. CHAMPUS MAXIMUM ALLOWABLE CHARGE SYSTEM

A. General. The CHAMPUS Maximum Allowable Charge (CMAC) System is effective for services rendered on and after May 1, 1992. Contractors shall process claims using the requirements specified in the TPM (specific TPM references follow). Adjustments shall be processed using the reimbursement system in place at the time the services were rendered. The zip code where the service was rendered determines the locality code to be used in determining the allowable charge under CMAC. In most instances the zip code used to determine locality code will be the zip code of the provider's office. For processing an adjustment on a claim which was reimbursed using CMAC, the zip code which was used to process the initial claim must be used to determine the locality for the allowable charge calculation for the adjustment. Adjustments shall be processed using the appropriate fee screen year, which shall be based on the date of service. Post Office Box zip codes are acceptable only for Puerto Rico and for providers whose major specialty is anesthesiology, radiology or pathology (see Chapter 5, Section 3).

B. Locality Code. For TED reporting, the locality code used in the reimbursement of the procedure code is to be reported for each payment record line item, i.e., on each line item where payment is based on a CMAC, the locality shall be reported. Any adjustment to a claim originally paid under CMAC without a locality code, shall include the locality code that it was priced on at the time of the initial payment. The locality code reported on the

initial claim shall be used to process any future adjustments of that claim unless one of the conditions listed below occurs:

1. The adjustment is changing the type of pricing from CMAC to state prevailing in which case the locality code should be blank filled, or;

2. The initial claim was priced incorrectly because of using a wrong locality code, in which case the correct locality code should be used.

VI. BONUS PAYMENTS IN MEDICALLY UNDERSERVED AREAS

A. An additional payment shall be made quarterly to physicians who qualify and provide services in medically underserved areas [Health Professional Shortage Areas (HPSA) and Physician Scarcity Areas (PSA)]. To initiate action for the additional payment, providers shall use modifiers that will signify the provider is requesting the additional payment. The modifiers are "QU" (urban HPSA), "QB" [rural HPSA], and "AR" [PSA bonus payment]. "QU", "QB" and "AR" are modifiers to the CPT/HCPCS procedure codes. The provider shall be paid an additional 10% HPSA bonus of the total amount paid, excluding interest payments, for claims that were processed during the calendar quarter for services rendered on or after June 1, 2003. The provider shall be paid an additional five percent PSA bonus of the total amount paid, excluding interest payment, for claims that were processed during the calendar quarter for services rendered on or after January 1, 2005. The contractor shall have 30 calendar days from the end of the calendar quarter to make the payments to the providers who qualify. The bonus payments could be paid to network, non-network, participating, or non-participating physicians. Special programs such as TPR, SHCP, and TSP shall be included in the bonus payment process. Contractors shall send bonus payments directly to the non-participating physician. Contractors shall report these claims on TEDs as required by the TSM, Chapter 2, Section 2.7 (Procedure Code Modifiers). See Chapter 1, Section 33 for additional information.

NOTE: Effective January 1, 2006, for services rendered on or after this date, the "QU" and "QB" modifiers shall be replaced with modifier "AQ".

1. The contractor is to inform providers of the PSA and HPSA bonus payments through stuffers and their quarterly news bulletin. The stuffers and bulletin should provide direction on what is required in order to obtain the bonus payment.

2. Basis of bonus payments to TRICARE-authorized providers is solely when a "AQ", "QU", "QB", or "AR" modifier is found on the claim.

B. Bonus payments are passthrough payments, non-financially underwritten payments. The contractor shall follow the process below. This process is similar to the payment of capital and direct medical education found under the DRG reimbursement system (see Chapter 3, Section 2, paragraph II.).

1. All bonus payments are non-financially underwritten and shall be made from the non-financially underwritten, bank account (see the TRICARE Operations Manual (TOM), Chapter 3, Section 2).

2. Bonus Payment Procedures. The contractor shall use the following procedures in making bonus payments to physicians:

a. Accumulate and tally claims paid with "QU", "QB", or "AR" modifiers.

b. Compute the amount due each physician for submitted claims during the calendar quarter for HPSA services rendered on or after June 1, 2003 and PSA services rendered on or after January 1, 2005. The PSA bonus only goes through June 30, 2008. Stop processing prior to check writing. Compute the total amount due all physicians. For services with both a professional and technical component, only the professional component would be included in the calculation of the bonus payment. The amount due is computed from claims with the "QU", "QB" and "AR" modifiers, then based on the amount paid (see paragraph VI.B.3.d.).

c. Any interest payments shall not be included in the computation of the payable bonus amount.

d. On the first work day of the last week of the month following the quarter, submit a voucher (see paragraph VI.B.3.) by express mail to TMA, CRM (a fax copy is not necessary).

e. After receiving clearance from TMA, CRM, continue processing through check write and mail out checks within two work days.

3. Vouchers

a. Format
- Physician Name
- Physician Address
- Physician Provider Number
- Period Covered (Quarter)
- Amount Paid/Collected for Bonus (see paragraph VI.B.3.d.)
- Total Bonus Paid [5 and/or 10% of the above bullet]

b. Sort Bonus Payment
- By Type (e.g., standard or active duty)
- By Coverage (Prime, Extra, Standard)
- By Fiscal Year of Bank Account
- By Contract
- By City & State
- By Region
- By Physician
- By Physician Number

- By Specialty
- By Address & Zip
- By Participating & Non-Participating
- By Contracted (Network) and Not Contracted (Non-network)
- By Modifier ("QB", "QU" or "AR")

c. The contractor's worksheet showing the payment computation shall be attached to the quarterly voucher for each physician.

d. In general:

Bonus Payment = 5% or 10% x [Total Amount Paid (claims with "QB" and "QU" modifiers or claims with "AR" modifier) During the Quarter - Interest Payments Associated with the claims for the Bonus Payment]

VII. BALANCE BILLING LIMITATION FOR NON-PARTICIPATING PROVIDERS

A. General

For services provided on or after November 1, 1993, non-participating providers may not balance bill the beneficiary more than 115% of the allowable charge.

NOTE: When the billed amount is less than 115% of the allowed amount, the provider is limited to billing the billed charge to the beneficiary. The balance billing limit is to be applied to each line item on a claim.

EXAMPLE 1: No Other Health Insurance

Billed charge	$500
Allowable charge	$200
Amount billed to beneficiary (115% of $200)	$230

EXAMPLE 2: Other Health Insurance

Billed charge	$500
Allowable charge	$200
Amount paid by other health insurance to the beneficiary	$200
Amount billable to beneficiary (115% of $200)	$230

NOTE: When payment is made by other health insurance, this payment does not affect the amount billable to the beneficiary by the non-participating provider except, when it can be determined, that the other health insurance limits the amount that can be billed to the beneficiary by the provider.

EXAMPLE 3: Provider Refuses To File Claim Or Has Charged An Administrative Fee

Billed charge	$100.00
CMAC	$110.00
Allowed amount	$100.00
10% abatement ($100 x 0.10)	$10.00
Adjusted allowed amount ($100 - $10)	$90.00
Provider billed charge to beneficiary	$100.00
(Limited to billed amount.)	

EXAMPLE 4: Non-Participating Provider Refuses To File Claim Or Has Charged An Administrative Fee

Billed charge	$150.00
CMAC	$100.00
Allowed amount	$100.00
10% abatement ($100 x 0.10)	$10.00
Adjusted allowed amount ($100 - $10)	$90.00
Provider billed charge to beneficiary	$103.50
($90.00 x 115%)	

1. Provider bulletins shall be used to notify authorized providers of the balance billing limitation of the amount that may be billed by a non-participating provider to the beneficiary.

2. Contractors shall notify beneficiaries of the balance billing limitation and the amount that may be legally billed by a non-participating provider to the beneficiary through stuffers.

3. The following language shall be used to respond to beneficiary inquiries concerning the TRICARE non-participating provider balance billing provision. Routine stuffers shall not be used to convey this information.

NOTE: In accordance with 32 CFR 199, a balance billing limitation for services provided by non-participating providers was effective on and after November 1, 1993. This provision limits non-participating providers from billing TRICARE beneficiaries more than 115% of the TRICARE allowable charge which is shown on the Explanation Of Benefits (EOB). Please note when the provider's billed charge is less than 115% of the TRICARE allowed amount, the billed charge becomes the billable amount to the beneficiary. However, this restriction does not apply to noncovered services. Nonparticipating providers who do not comply with the limitation shall be subject to exclusion from the TRICARE program as authorized providers and may be excluded as a Medicare provider. If a non-participating provider bills and/or collects more from the beneficiary than the amount the provider may bill, contact the contractor's Program Integrity Department in writing. The beneficiary should include information which documents the higher billed amount, such as a copy of the EOB, bills from the non-participating provider to the beneficiary, demand letter from the non-participating provider to the beneficiary requesting an amount above the 115% of the

allowable amount, and copies of cancelled checks that would identify excessive amounts paid by the beneficiary to the non-participating provider.

B. Failure To Comply

1. If a non-participating provider fails to comply with this balance billing limitation requirement, the provider shall be subject to exclusion from the TRICARE Program as an authorized provider and may be excluded as a Medicare provider.

2. When the contractor receives a complaint that a non-participating provider is balance billing a beneficiary for an amount greater than 115% of the allowable charge, the contractor's Program Integrity Department shall investigate the complaint, communicate their findings to the beneficiary and take action against the provider, if appropriate. A beneficiary complaint letter will serve as a release form in order to educate the provider and as the basis for resolving the balance billing requirement. Only information where there is a need to know such as the billed charges should be discussed or released.

3. To exclude a provider from the TRICARE program, a pattern of such billing practices must be established along with documented evidence that the provider was advised of the balance billing limitation for non-participating providers, but continued to bill beneficiaries higher amounts after being notified.

4. Documented evidence could include certified registered mail, special provider news bulletins, and documented telephone conversations and/or meetings with the provider concerning his/her TRICARE billing practices as they related to the balance billing limitation. In addition, the contractor's Program Integrity Department shall follow the instructions in the TOM, Chapter 14, Section 6.

C. Granting of Waiver Of Limitation

When requested by a TRICARE beneficiary, the contractor, on a case-by-case basis, may waive the balance billing limitation. If the beneficiary is willing to pay the non-participating provider for his/her billed charges, then the waiver shall be granted. The contractor shall obtain a signed statement from the beneficiary stating that he/she is aware that the provider is billing above the 115% limit, however, they feel strongly about using that provider and they are willing to pay the additional money. The beneficiary shall be advised that the provider still may be excluded from the TRICARE program, if he/she is over billing other TRICARE beneficiaries and they object. The waiver is controlled by the contractor, not by the provider. The contractor is responsible for communicating the potential costs to the beneficiary if the waiver statement is signed. A decision by the contractor to waive or not to waive the limit is not subject to the TRICARE appeals process.

- END -

contractor. Non-network RTCs (see the TOM, Chapter 4) shall be reimbursed based on the rate established by TMA, using the methodology specified in Chapter 7, Section 4.

VII. REIMBURSEMENT OF AMBULATORY SURGICAL CENTERS (ACSs)

A. General

1. Payment for facility charges for ambulatory surgical services will be made using prospectively determined rates. The rates will be divided into 11 payment groups representing ranges of costs and will apply to all ambulatory surgical procedures identified by TMA regardless of whether they are provided in a freestanding ambulatory surgical center (ASC), in a hospital outpatient clinic, or in a hospital emergency room.

2. TMA will provide the facility payment rates to the contractors on magnetic media and will provide updates each year. The magnetic media will include the locality-adjusted payment rate for each payment group for each Metropolitan Statistical Area (MSA) and will identify, by procedure code, the procedures in each group and the effective date for each procedure. In addition, the contractors will be provided a zip code to MSA crosswalk.

3. Contractors are required to maintain only two sets of rates on their on-line systems at any time.

4. Professional services related to ambulatory surgical procedures will be reimbursed under the instructions for individual health care professionals and other non-institutional health care providers in Chapter 3, Section 1.

5. See Chapter 9, Section 1 for additional instructions.

B. Payment Procedures. All rate calculations will be performed by TMA (or its data contractor) and will be provided to each contractor. In pricing a claim, the contractor will be required to identify the zip code of the facility which provided the services (for the actual location, not the billing address, etc.) and the procedure(s) performed. The contractor shall use the zip code to MSA crosswalk to identify the rates applicable to that facility and then will select the rate applicable to the procedure(s) performed. Multiple procedures are to be reimbursed in accordance with the instructions in the TRICARE Policy Manual (TPM). Surgical and bilateral procedures (both institutional and professional) will be subject to the multiple surgery discounting guidelines and modifier requirement as prescribed under Chapter 1, Section 16, paragraph III.A.1.a. through c. and Chapter 13, Section 3, paragraph III.A.5.b. and c. for services rendered on or after May 1, 2009 (implementation of the Outpatient Prospective Payment System (OPPS)).

C. Claims Form Requirements. Claims for facility charges must be submitted on a CMS 1450 UB-04. Claims for professional charges may be submitted on either a CMS 1450 UB-04 or a CMS 1500 (08/05) claim form. The preferred form is the CMS 1500 (08/05). When professional services are billed on a CMS 1450 UB-04, the information on the CMS 1450 UB-04 should indicate that these services are professional in nature and be identified by the appropriate CPT-4 code and revenue code.

VIII. CLAIM ADJUSTMENTS

Facilities may not submit a late charge bill (frequency 5 in the third position of the bill type). They must submit an adjustment bill for any services required to be billed with HCPCS codes, units, and line item dates of service by reporting frequency 7 (replacement of a prior claim) or frequency 8 (void/cancel of a prior claim). Claims submitted with a frequency code of 7 or 8 should report the original claim number in Form Locator (FL) 64 on the CMS 1450 UB-04 claim form.

IX. PROPER REPORTING OF CONDITION CODES

Hospitals should report valid Condition Codes on the CMS 1450 UB-04 claim form as necessary.

A. Condition Codes are reported in FLs 18-28 when applicable.

B. The following are two examples of condition code reporting:

1. **Condition Code G (zero)** identifies when multiple medical visits occurred on the same day in the same revenue center but the visits were distinct and constituted independent visits. An example of such a situation would be a beneficiary going to the emergency room twice on the same day - in the morning for a broken arm and later for chest pain.

a. Multiple medical visits on the same day in the same revenue center may be submitted on separate claims. Hospitals should report condition code G0 on the second claim.

b. Claims with condition code G0 should not be automatically rejected as a duplicate claim.

2. **Condition Code 41** identifies a claim being submitted for Partial Hospitalization Program (PHP) services.

- END -

insurance which has paid $1,645.00 on the claim. The wage adjusted TRICARE APC rate for the procedure performed is $1,235.00.

STEP 1:

$ 1,235.00	-	APC allowed amount
- 0.00	-	Deductible and cost-sharing not applied since beneficiary is a Prime active duty family member
$ 1,235.00	-	Amount payable by TRICARE in the absence of other coverage

STEP 2:

$ 2,450.00	-	Billed charge
- 1,645.00	-	OHI payment
$ 805.00	-	Unpaid balance

STEP 3: TRICARE pays $805.00 balance, since it is less than what TRICARE would have paid in the absence of double coverage.

NOTE: The above COB methodology for hospital outpatient services will not go into effect until implementation of the hospital outpatient prospective payment system. This new reimbursement system is tentatively scheduled to become effective on or after May 1, 2009 (implementation of the Outpatient Prospective Payment System (OPPS)).

VII. EXAMPLES OF COMPUTATION OF THE TRICARE SHARE WHEN THE BENEFICIARY'S LIABILITY IS LIMITED UNDER THE OHI

EXAMPLE 1: The bill for outpatient care for an active duty dependent is $200.00, which is considered allowable by TRICARE. The TRICARE deductible has been met. The provider submitted the claim on a participating basis, along with an EOB from the OHI. The OHI discounted rate is $100.00 and it paid $90.00. The beneficiary's liability is limited to $100.00 under the OHI, and this is evident on the EOB from the OHI. The provider submitted a claim for $200.00.

STEP 1:

$ 200.00	-	Allowable charges
x 80%	-	TRICARE portion for active duty dependents
$ 160.00	-	Amount payable by TRICARE in the absence of other coverage

STEP 2:

$ 100.00	-	OHI amount allowed
- 90.00	-	Paid by OHI
$ 10.00	-	Unpaid balance

STEP 3: TRICARE pays $10.00 to the provider since this is the lower of the two computations. The beneficiary owes nothing, since the full legal liability has been paid.

EXAMPLE 2: A provider's normal charge for an outpatient service is $160.00. The provider is a network provider and has a negotiated discount rate of 10% off the CMAC amount which is $145.00. The provider also has a discounted rate of $110.00 with the OHI and receives no OHI payment due to application of OHI deductible. The beneficiary is a retiree who is enrolled in Prime. The

beneficiary's liability is limited to $110.00 under the OHI, and this is evident on the EOB from the OHI.

STEP 1:

$ 160.00	-	Billed amount
$ 145.00	-	CMAC amount
$ 130.50	-	Negotiated rate (10% off the CMAC amount)
- 12.00	-	TRICARE Prime copay for retirees
$ 118.50	-	Amount payable by TRICARE in the absence of other coverage

STEP 2:

$ 110.00	-	OHI amount allowed
- 0.00	-	Paid by OHI
$ 110.00	-	Unpaid balance

STEP 3: TRICARE pays $110.00 since this is the lower of the two computations, and the beneficiary owes nothing.

EXAMPLE 3: The billed charge for seven days of inpatient care in March 2002 for a retiree is $5,000.00. The claim is subject to the TRICARE DRG-based payment system, and the DRG- based amount is $6,000.00. The hospital has agreed to a 10% discount off the DRG amount. The retiree cost-share under the DRG-based payment system is $1,250.00, which is 25% of the billed charges. (This is lower than the per diem of $414.00 reduced by the 10% discount and multiplied by 7 days.) The OHI discounted rate is $4,200.00 and it paid $4,000.00. The beneficiary's liability is limited to $4,200.00 under the OHI, and this is evident on the EOB from the OHI. The hospital submits a claim for $1,000.00 along with an EOB from the OHI.

STEP 1:

$ 6,000.00	-	DRG-based amount
- 600.00	-	10% discount
$ 5,400.00	-	DRG amount reduced by the discount
- 1,250.00	-	Cost-share
$ 3,150.00		

STEP 2:

$ 5,400.00	-	DRG amount reduced by the discount
- 4,000.00	-	OHI payment
$ 1,400.00		

STEP 3:

$ 4,200.00	-	OHI amount allowed
- 4,000.00	-	OHI payment
$ 200.00		

STEP 4:

$ 4,200.00	-	OHI amount allowed
- 1,250.00	-	Cost-share
$ 2,950.00		

STEP 5: TRICARE pays $200.00, since it is the lowest amount of Steps 1 - 4. The beneficiary owes nothing, since the full legal liability has been paid.

- END -

D. The CMAC applies to all 50 states, Puerto Rico, and the Philippines. Further information regarding the reimbursement of professional services in the Philippines, see the TRICARE Policy Manual (TPM), Chapter 12, Section 11.1. Guam and the U.S. Virgin Islands are to still be paid as billed for professional services.

E. Updates to the CMACs shall occur annually and quarterly when needed. The annual update usually takes place February 1. However, circumstances may cause the updates to be delayed. Managed Care Support Contractors (MCSCs) shall be notified when the annual update is delayed.

F. Provisions which affect the TRICARE allowable charge payment methodology.

NOTE: The first CMAC file update for 1999, raises all CMACs for physicians and psychologists that are priced using the Medicare Relative Value Units (RVUs) to the Medicare Fee Schedule levels. CMACs for mental health providers (clinical social workers, certified marriage and family therapists, and pastoral and mental health counselors under a physician's supervision) shall be reduced by 15% in 1999 and a further 10% in 2000 so that they will be equal to 75% of the CMAC for psychiatrists and psychologists by the year 2000. Medicare reimburses these providers at the same differential.

Effective for services provided on or after September 1, 2003, the payment for certain provider changes to the physician payment level. These providers include: podiatrists, oral surgeons, optometrists, occupational therapists, speech therapists, physical therapists, audiologists, and psychologists. Previously, psychologists were paid under the physician payment level, and the above remaining providers were paid under the non-physician payment level. Podiatrists, oral surgeons, and optometrists shall also come under the HPSA bonus payment. See Chapter 1, Section 33.

1. Reductions in maximum allowable payments to Medicare levels.

2. Balance billing limitation.

a. Nonparticipating providers may not balance bill a beneficiary an amount which exceeds the applicable balance billing limit. This limit is 115% of the TRICARE allowable charge, not to exceed the billed charge.

NOTE: When the billed amount is less than 115% of the allowed amount, the provider is limited to billing the billed charge to the beneficiary. The balance billing limit is to be applied to each line item on a claim.

EXAMPLE 1: No Other Health Insurance (OHI)

Billed charge	$500
Allowable charge	$200
Amount billed to beneficiary (115% of $200)	$230

EXAMPLE 2: OHI

Billed charge	$500
Allowable charge	$200
Amount paid by OHI to the beneficiary	$200
Amount billable to beneficiary (115% of $200)	$230

NOTE: When payment is made by OHI, this payment does not affect the amount billable to the beneficiary by the nonparticipating provider except, when it can be determined that the OHI limits the amount that can be billed to the beneficiary by the provider.

b. Failure to Comply. If a nonparticipating provider fails to comply with this balance billing limitation requirement, the provider shall be subject to exclusion from the TRICARE Program as an authorized provider and may be excluded as a Medicare provider.

c. Granting of Waiver of Limitation. When requested by a TRICARE beneficiary, the contractor, on a case-by-case basis, may waive the balance billing limitation. If the beneficiary is willing to pay the nonparticipating provider for his/her billed charges, then the waiver shall be granted. The contractor shall obtain a signed statement from the beneficiary stating that he/she is aware that the provider is billing above the 115% limit, however, they feel strongly about using that provider and they are willing to pay the additional money. The beneficiary shall be advised that the provider still may be excluded from the TRICARE program, if he/she is over billing other TRICARE beneficiaries and they object. The waiver is controlled by the contractor, not by the provider. The contractor is responsible for communicating the potential costs to the beneficiary if the waiver statement is signed. A decision by the contractor to waive or not to waive the limit is not subject to the appeals process. For the TRICARE Outpatient Prospective Payment System (OPPS), the granting of waivers for balance billing limitations applies only to EXEMPT OPPS providers.

3. Site of Service. CMAC payments based on site of service becomes effective for services rendered on or after April 1, 2005. Payment based on site of service is a concept used by Medicare to distinguish between services rendered in a facility setting as opposed to a non-facility setting. Prior to April 1, 2005, CMACs were established at the higher rate of the facility or non-facility payment level. For some services such as radiology and laboratory tests, the facility and non-facility payment levels are the same. In addition, prior to April 1, 2005, CMAC pricing was established by class of provider (1, 2, 3, and 4). These four classes of providers will be superseded by four categories.

a. Categories.

Category 1: Services of MDs, DOs, optometrists, podiatrists, psychologists, oral surgeons, and audiologists provided in a facility including hospitals (both inpatient and outpatient and billed with the appropriate revenue code for the outpatient department where the services were rendered), residential treatment centers (RTCs), ambulances, hospices, military treatment facilities (MTFs), psychiatric facilities, community mental health centers (CMHCs), skilled nursing facilities (SNFs), ambulatory surgical centers (ASCs), etc.

Category 2: Services of MDs, DOs, optometrists, podiatrists, psychologists, oral surgeons, and audiologists provided in a non-facility including provider offices, home settings, and all other non-facility settings. The non-facility CMAC rate applies to occupational therapy (OT), physical therapy (PT), or speech therapy (ST) regardless of the setting.

Category 3: Services, of all other providers not found in Category 1, provided in a facility including hospitals (both inpatient and outpatient and billed with the appropriate revenue code for the outpatient department where the services were rendered), RTCs, ambulances, hospices, MTFs, psychiatric facilities, CMHCs, SNFs, ASCs, etc.

Category 4: Services, of all other providers not found in Category 2, provided in a non-facility including provider offices, home settings, and all other non-facility settings.

b. Linking the site of service with the payment category. The contractor is responsible for linking the site of service with the proper payment category. The rates of payment are found on the CMAC file that are supplied to the contractor by TMA through its contractor that calculates the CMAC rates.

c. Payment of 0510 and 0760 series revenue codes.

(1) Effective for services on or after April 1, 2005, payment of 0510 and 0760 series revenue codes shall begin. Payment would be made as billed unless a discounted negotiated rate can be obtained for OPPS exempt providers.

(2) Effective for services on or after May 1, 2009 (implementation of OPPS), payment of 0510 and 0760 series revenue codes will be based on the HCPCS codes submitted on the claim and reimbursed under the OPPS for providers reimbursed under the OPPS methodology.

d. Reimbursement Hierarchy For Procedures Paid Outside The OPPS.

(1) CMAC Facility Pricing Hierarchy (No Technical Component (TC) Modifier).

(a) The following table includes the list of rate columns on the CMAC file. The columns are number 1 through 6 by description. The pricing hierarchy for facility CMAC is 8, 6, 4, then 2.

COLUMN	DESCRIPTION	CATEGORY CROSSWALK
1	Non-facility CMAC for physician/LLP class	Category 2
2	Facility CMAC for physician/LLP class	Category 1
Description: If non-physician TC > 0, then pay the non-physician TC. Otherwise, if the Physician class TC rate > 0, then pay the Physician class TC rate. Otherwise, if the Facility CMAC for non-physician class > 0, then pay the Facility CMAC for non-physician class. Otherwise, pay Facility CMAC for physician/LLP class.		

COLUMN	DESCRIPTION	CATEGORY CROSSWALK
3	Non-facility CMAC for non-physician class	Category 4
4	Facility CMAC for non-physician class	Category 3
5	Physician class Professional Component (PC) rate	
6	Physician class TC rate	
7	Non-physician class PC rate	
8	Non-physician class TC rate	
Description: If non-physician TC > 0, then pay the non-physician TC. Otherwise, if the Physician class TC rate > 0, then pay the Physician class TC rate. Otherwise, if the Facility CMAC for non-physician class > 0, then pay the Facility CMAC for non-physician class. Otherwise, pay Facility CMAC for physician/LLP class.		

NOTE: Hospital-based therapy services, i.e., OT, PT, and ST, shall be reimbursed at the non-facility CMAC for physician/LLP class.

(b) If there is no CMAC available, the contractor shall reimburse the procedure under Durable Medical Equipment, Prosthetics, Orthotics, and Supplies (DMEPOS).

(2) DMEPOS. If there is no DMEPOS available, the contractor shall reimburse the procedure using state prevailings.

(3) State Prevailing Rate. If there is no state prevailing rate available, the contractor shall reimburse the procedure based on billed charges.

e. Informing the provider community of the pricing changes for 2005. The contractors are to inform the provider community of the pricing changes based on site of service beginning April 1, 2005, for services rendered on or after this date. Medicare has been using site of service for some time. TMA would simply be adopting this pricing from Medicare. Contractors may need to renegotiate agreements with providers reflecting this change.

f. Services and procedure codes not affected by site of service. Anesthesia services, laboratory services, component pricing services such as radiology, and "J" codes are some of the more common services and codes that will not be affected by site of service.

g. CMAC history files. The contractor is to retain and maintain previous years CMAC files for historical purposes. Since the 2005 CMAC file format is different, it will be more difficult to link to the previous years CMAC files.

4. Multiple Surgery Discounting. Professional surgical procedures which are reimbursed under the CMAC payment methodology will be subject to the same multiple surgery guidelines and modifier requirement as prescribed under the OPPS for services rendered on or after May 1, 2009 (implementation of OPPS). Refer to Chapter 1, Section 16,

paragraph III.A.1.a. through c. and Chapter 13, Section 3, paragraph III.A.5.b. and c. for further detail.

5. Industry standard modifiers and condition codes may be billed on outpatient hospital or individual professional claims to further define the procedure code or indicate that certain reimbursement situations may apply to the billing. Recognition and utilization of modifiers are essential for ensuring accurate processing and payment of these claims.

- END -

CHAPTER 7

MENTAL HEALTH

SECTION	SUBJECT
1	Hospital Reimbursement - TRICARE/CHAMPUS Inpatient Mental Health Per Diem Payment System
2	Psychiatric Partial Hospitalization Program (PHP) Reimbursement On Or Before May 1, 2009 (Implementation Of OPPS), And Thereafter, Freestanding Psychiatric PHP Reimbursement
3	Substance Use Disorder Rehabilitation Facilities Reimbursement
4	Residential Treatment Center (RTC) Reimbursement
ADDENDUM A	Table Of Regional Specific Rates For Psychiatric Hospitals And Units With Low TRICARE Volume (FY 2007 - FY 2009)
ADDENDUM B	Table Of Maximum Rates For Partial Hospitalization Programs (PHPs) On Or Before May 1, 2009 (Implementation Of OPPS), And Thereafter, Freestanding Psychiatric PHP Reimbursement (FY 2007 - FY 2009)
ADDENDUM C	Participation Agreement For Substance Use Disorder Rehabilitation Facility (SUDRF) Services For TRICARE/CHAMPUS Beneficiaries
ADDENDUM D	TRICARE/CHAMPUS Standards For Inpatient Rehabilitation And Partial Hospitalization For The Treatment Of Substance Use Disorders (SUDRFs)
ADDENDUM E	Participation Agreement For Residential Treatment Center (RTC)
ADDENDUM F	Guidelines For The Calculation Of Individual Residential Treatment Center (RTC) Per Diem Rates
ADDENDUM G	(FY 2007) - TRICARE-Authorized Residential Treatment Centers - For Payment Of Services Provided On Or After 10/01/2006
ADDENDUM G	(FY 2008) - TRICARE-Authorized Residential Treatment Centers - For Payment Of Services Provided On Or After 10/01/2007
ADDENDUM G	(FY 2009) - TRICARE-Authorized Residential Treatment Centers - For Payment Of Services Provided On Or After 10/01/2008
ADDENDUM H	TRICARE/CHAMPUS Standards For Residential Treatment Centers (RTCs) Serving Children And Adolescents

SECTION	SUBJECT
ADDENDUM I	Participation Agreement For Hospital-Based Psychiatric Partial Hospitalization Program Services
ADDENDUM J	Participation Agreement For Freestanding Psychiatric Partial Hospitalization Program Services

CHAPTER 7
SECTION 2

PSYCHIATRIC PARTIAL HOSPITALIZATION PROGRAM (PHP) REIMBURSEMENT ON OR BEFORE MAY 1, 2009 (IMPLEMENTATION OF OPPS), AND THEREAFTER, FREESTANDING PSYCHIATRIC PHP REIMBURSEMENT

ISSUE DATE: July 14, 1993
AUTHORITY: 32 CFR 199.14(a)(2)(ix)

I. APPLICABILITY

This policy is mandatory for reimbursement of services provided by either network or non-network providers. However, alternative network reimbursement methodologies are permitted when approved by the TRICARE Management Activity (TMA) and specifically included in the network provider agreement.

II. ISSUE

Reimbursement of Psychiatric Partial Hospitalization Programs (PHPs) on or before May 1, 2009 (implementation of Outpatient Prospective Payment System (OPPS)), and thereafter, freestanding psychiatric PHPs.

III. POLICY

A. Per diem payment for psychiatric partial hospitalization services. Psychiatric partial hospitalization services authorized and provided under 32 CFR 199.4(b)(10) and provided by psychiatric PHPs authorized under 32 CFR 199.4(b)(3)(xii) are reimbursed on the basis of prospectively determined, all-inclusive per diem rates. The per diem payment amount must be accepted as payment in full for all PHP services provided. The following services and supplies are included in the per diem rate approved for an authorized PHP and are not covered even if separately billed by an individual professional provider. Effective on May 1, 2009 (implementation of OPPS), hospital-based PHP services are reimbursed under the hospital OPPS as described in Chapter 13, Section 2, paragraph G.

1. Board. Includes use of the partial hospital facilities such as food service, supervised therapeutically constructed recreational and social activities, etc.

2. Patient assessment. Includes the assessment of each individual accepted by the facility, and must, at a minimum, consist of a physical examination; psychiatric examination; psychological assessment; assessment of physiological, biological and cognitive processes; developmental assessment; family history and assessment; social history and assessment; educational or vocational history and assessment; environmental assessment; and

recreational/activities assessment. Assessments conducted within 30 days prior to admission to a partial program may be used if approved and deemed adequate to permit treatment planning by the partial hospital program.

3. Psychological testing and assessment.

4. Treatment services. All services including routine nursing services, group therapy, supplies, equipment and space necessary to fulfill the requirements of each patient's individualized diagnosis and treatment plan (with the exception of the psychotherapy as indicated in paragraph III.B.1.). All mental health services must be provided by a authorized individual professional provider of mental health services. [Exception: PHPs that employ individuals with master's or doctoral level degrees in a mental health discipline who do not meet the licensure, certification and experience requirements for a qualified mental health provider but are actively working toward licensure or certification, may provide services within the all-inclusive per diem rate but the individual must work under the clinical supervision of a fully qualified mental health provider employed by the PHP.]

5. Ancillary therapies. Includes art, music, dance, occupational, and other such therapies.

6. Overhead and any other services for which the customary practice among similar providers is included as part of the institutional charges.

B. Services which may be billed separately. The following services are not considered as included within the per diem payment amount and may be separately billed when provided by an authorized individual professional provider:

1. Psychotherapy sessions. Professional services provided by an authorized individual professional provider (who is not employed by or under contract with the PHP) for purposes of providing clinical patient care to a patient in the PHP may be cost-shared when billed by the individual professional provider. Any obligation of a professional provider to provide services through employment or contract in a facility or distinct program of a facility would preclude that professional provider from receiving separate TRICARE/CHAMPUS reimbursement on a fee-for-service basis to the extent that those services are covered by the employment or contract arrangement. Psychotherapy services provided outside of the employment/contract arrangement can be reimbursed separately from the PHPs per diem. Professional mental health benefits are limited to a maximum of one session (60 minutes individual, 90 minutes family, etc.) per authorized treatment day not to exceed five sessions in any calendar week in any combination of individual and family therapy. Five sessions per week is an absolute limit, and additional sessions are not covered.

NOTE: Group therapy is strictly included in the per diem and cannot be paid separately even if billed by an individual professional provider.

2. Primary/Attending Provider. When a patient is approved for admission to a PHP, the primary or attending provider (if not contracted or employed by the partial program) may provide psychotherapy only when the care is part of the treatment environment which

is the therapeutic partial program. That is why the patient is there--because that level of care and that program have been determined as medically necessary. The therapy must be adapted toward the events and interactions outlined in the treatment plan and be part of the overall partial treatment plan. Involvement as the primary or attending is allowed and covered only if he is part of the coherent and specific plan of treatment arranged in the partial setting. The treatment program must be under the general direction of the psychiatrist employed by the program to ensure medication and physical needs of the patients are met and the therapist must be part of the treatment team and treatment plan. An attending provider must come to the treatment plan meetings and his/her care must be coordinated with the treatment team and as part of the treatment plan. Care given independent of this is not covered.

3. Non-mental health related medical services. Those services not normally included in the evaluation and assessment of a partial hospitalization patient and not related to care in the PHP. These medical services are those services medically necessary to treat a broken leg, appendicitis, heart attack, etc., which may necessitate emergency transport to a nearby hospital for medical attention. Ambulance services may be cost-shared when billed for by an authorized provider if determined medically necessary for emergency transport.

C. Per diem rate.

For any full day PHP (minimum of six hours), the maximum per diem payment amount is 40% of the average inpatient per diem amount per case paid to both high and low volume psychiatric hospitals and units established under the mental health per diem reimbursement system. The rates shall be updated to the current year using the same factors as used under the TRICARE mental health per diem reimbursement system. A PHP of less than six hours (with a minimum of three hours) will be paid a per diem rate of 75% of the rate for full-day PHP. TRICARE will not fund the cost of educational services separately from the per diem rate. The hours devoted to education do not count toward the therapeutic half or full day program. See Chapter 7, Addendum B, for the current maximum rate limits which are to be used as is for the full day and half day program.

D. Other requirements.

No payment is due for leave days, for days in which treatment is not provided, for days in which the patient does not keep an appointment, or for days in which the duration of the program services was less than three hours.

- END -

CHAPTER 7
ADDENDUM B

TABLE OF MAXIMUM RATES FOR PARTIAL HOSPITALIZATION PROGRAMS (PHPS) ON OR BEFORE MAY 1, 2009 (IMPLEMENTATION OF OPPS), AND THEREAFTER, FREESTANDING PSYCHIATRIC PHP REIMBURSEMENT (FY 2007 - FY 2009)

UNITED STATES CENSUS REGIONS	FULL-DAY RATE (6 HOURS OR MORE)			HALF-DAY RATE (3-5 HOURS)		
	10/01/06-09/30/07	10/01/07-09/30/08	10/01/08-09/30/09	10/01/06-09/30/07	10/01/07-09/30/08	10/01/08-09/30/09
Northeast:						
New England (ME, NH, VT, MA, RI, CT)	$275	$284	$293	$207	$214	$221
Mid-Atlantic (NY, NJ, PA)	$298	$308	$318	$224	$232	$239
Midwest:						
East North Central (OH, IN, IL, MI, WI)	$262	$271	$280	$196	$203	$209
West North Central (MN, IA, MO, ND, SD, NE, KS)	$262	$271	$280	$196	$203	$209
South:						
South Atlantic (DE, MD, DC, VA, WV, NC, SC, GA, FL)	$282	$292	$301	$212	$219	$226
East South Central (KY, TN, AL, MS)	$305	$315	$325	$229	$237	$245
West South Central (AR, LA, TX, OK)	$305	$315	$325	$229	$237	$245
West:						
Mountain (MT, ID, WY, CO, NM, AZ, UT, NV)	$308	$318	$328	$232	$240	$248
Pacific (WA, OR, CA, AK, HI)	$302	$312	$322	$226	$234	$241
Puerto Rico	$196	$203	$209	$148	$153	$158
Days of 3 hours or less: no payment authorized.						

NOTE: This table reflects maximum rates.

- END -

CHAPTER 9

AMBULATORY SURGERY CENTERS (ASCS)

SECTION	SUBJECT
1	Ambulatory Surgical Center (ASC) Reimbursement On Or Before May 1, 2009 (Implementation Of OPPS), And Thereafter, Freestanding ASCs, And Non-OPPS Facilities Reimbursement

CHAPTER 9
SECTION 1

AMBULATORY SURGICAL CENTER (ASC) REIMBURSEMENT ON OR BEFORE MAY 1, 2009 (IMPLEMENTATION OF OPPS), AND THEREAFTER, FREESTANDING ASCS, AND NON-OPPS FACILITIES REIMBURSEMENT

ISSUE DATE: August 26, 1985
AUTHORITY: 32 CFR 199.14(d)

I. APPLICABILITY

The policy is mandatory for reimbursement of services provided by either network or non-network providers. However, alternative network reimbursement methodologies are permitted when approved by the TRICARE Management Activity (TMA) and specifically included in the network provider agreement.

II. ISSUE

Reimbursement of surgical procedures performed in an Ambulatory Surgical Center (ASC) on or before May 1, 2009 (implementation of TRICARE's Outpatient Prospective Payment System (OPPS)), and thereafter, freestanding ASCs, and other providers who are exempt from the TRICARE OPPS and provide scheduled ambulatory surgery. For purposes of this section, these facilities are known as non-OPPS facilities. Non-OPPS facilities include any facility not subject to the OPPS as outlined in Chapter 13, Section 1, paragraph III.D.1.b.

III. BACKGROUND

A. Reimbursement System On or Before May 1, 2009 (Implementation of TRICARE's OPPS).

1. General. Ambulatory surgery procedures performed in ASCs will be reimbursed using prospectively determined rates. The rates will be: established on a cost-basis, divided into eleven payment groups representing ranges of costs, and adjusted for area labor costs based on Metropolitan Statistical Areas (MSAs).

2. Applicability.

a. The ambulatory surgery payment system is to be used regardless of where the ambulatory surgery procedures are provided, that is, in a freestanding ASC, in a hospital outpatient department, or in a hospital emergency room (ER). No additional benefits are payable outside the ASC payment rate; e.g., revenue codes 260, 450, 510, 636, etc.

b. The payment rates established under this system apply only to the facility charges for ambulatory surgery. The facility rate is a standard overhead amount that includes nursing and technician services; use of the facility; drugs including take-home drugs for less than $40; biologicals; surgical dressings, splints, casts and equipment directly related to provision of the surgical procedure; materials for anesthesia; intraocular lenses (IOLs); and administrative, recordkeeping and housekeeping items and services. The rate does not include items such as physicians' fees (or fees of other professional providers authorized to render the services identified and to bill independently for them); laboratory, X-rays or diagnostic procedures (other than those directly related to the performance of the surgical procedure); prosthetic devices (except IOLs); ambulance services; leg, arm, and back braces; artificial limbs; and durable medical equipment for use in the patient's home.

NOTE: A radiology and diagnostic procedure is considered directly related to the performance of the surgical procedure only if it is an inherent part of the surgical procedure, e.g., the CPT code for the surgical procedure includes the diagnostic or radiology procedure as part of the code description (i.e., CPT[1] procedure code 47560).

3. State Waiver. Ambulatory surgery services provided by freestanding ASCs in Maryland are not exempt from this system and are to be reimbursed using the procedures set forth in this section. (See Chapter 1, Section 24, paragraph III.E. for payment of professional services related to ambulatory surgery.)

4. Ambulatory Surgery Payment Rates.

a. TMA, or its data contractor, will calculate the payment rates and will provide them electronically to the claims processing contractors. The magnetic media will include the locally-adjusted payment rate for each payment group for each MSA and will identify, by procedure code, the procedures in each group and the effective date for each procedure. Additions or deletions to the list of procedures will be given to the contractors as they occur, but the electronic data will be provided only on an annual basis. The MSAs and corresponding wage indexes will be those used by Medicare.

b. In addition to the payment rates, the contractors will be provided a zip code to MSA crosswalk, so that they can determine which payment rate to use for each ambulatory surgery provider. For this purpose the zip code of the facility's physical address (as opposed to its billing address) is to be used. This crosswalk may be updated periodically throughout the year and sent to the contractors.

c. In order to calculate payment rates, only those procedures with at least 25 claims nationwide during the database period will be used.

[1] CPT only © 2006 American Medical Association (or such other date of publication of CPT). All Rights Reserved.

d. The rates were initially calculated using the following steps.

(1) For each ambulatory surgery procedure, a median standardized cost was calculated on the basis of all ambulatory surgery charges nationally under TRICARE during the one year database period. The steps in this calculation included:

(a) Standardizing for local labor costs by reference to the same wage index and labor/non-labor-related cost ratio as applies to the facility under Medicare;

(b) Applying the cost-to-charge ratio (CCR) using the Medicare CCR for freestanding ASCs for TRICARE ASCs.

(c) Calculating a median cost for each procedure; and

(d) Updating to the year for which the payment rates were in effect by the Consumer Price Index-Urban (CPI-U).

(2) Procedures were placed into one of ten groups by their median per procedure cost, starting with $0 to $299 for Group 1 and ending with $1,000 to $1,299 for Group 9 and $1,300 and above for Group 10. Groups 2 through 8 were set on the basis of $100 fixed intervals.

(3) The standard payment amount per group will be the volume weighted median per procedure cost for the procedures in that group.

(4) Procedures for which there was no or insufficient (less than 25 claims) data were assigned to groups by:

(a) Calculating a volume-weighted ratio of TRICARE payment rates to Medicare payment rates for those procedures with sufficient data;

(b) Applying the ratio to the Medicare payment rate for each procedure; and

(c) Assigning the procedure to the appropriate payment group.

e. The amount paid for any ambulatory surgery service under these procedures cannot exceed the amount that would be allowed if the services were provided on an inpatient basis. The allowable inpatient amount equals the applicable DRG relative weight multiplied by the national large urban adjusted standardized amount. This amount will be adjusted by the applicable hospital wage index.

f. As of November 1, 1998, an eleventh payment group is added to this payment system. This group will include extracorporeal shock wave lithotripsy.

5. Payments.

a. General. The payment for a procedure will be the standard payment amount for the group which covers that procedure, adjusted for local labor costs by reference to the same labor/non-labor-related cost ratio and hospital wage index as used for ASCs by Medicare. This calculation will be done by TMA, or its data contractor. For participating claims, the ambulatory surgery payment rate will be reimbursed regardless of the actual charges made by the facility--that is, regardless of whether the actual charges are greater or smaller than the payment rate. For nonparticipating claims, reimbursement (TRICARE payment plus beneficiary cost-share plus any double coverage payments, if applicable) cannot exceed the lower of the billed charge or the group payment rate.

b. Procedures Which Do Not Have An Ambulatory Surgery Rate and Are Provided by an ASC. Only those procedures that have an ambulatory surgery rate listed on TMA's ambulatory surgery web site (http://www.tricare.mil/ambulatory) are to be reimbursed under this reimbursement process. If a claim is received from an ASC for a procedure which is not listed on TMA's ambulatory web site, the facility charges are to be reimbursed using the process in paragraph III.B.

c. Multiple and Terminated Procedures. The following rules are to be followed whenever there is a terminated surgical procedure or more than one procedure is included on an ambulatory surgery claim. The claim for professional services, regardless of what type of ambulatory surgery facility provided the services and regardless of what procedures were provided, is to be reimbursed according to the multiple surgery guidelines in Chapter 1, Section 16, paragraph III.A.1.a. through c.

(1) Discounting for Multiple Surgical Procedures.

(a) If all the procedures on the claim are listed on TMA's ambulatory surgery web site, the claim is to be reimbursed at 100% of the group payment rate for the major procedure (the procedure which allows the greatest payment) and 50% of the group payment rate for each of the other procedures. This applies regardless of the groups to which the procedures are assigned.

(b) If the claim includes procedures listed on TMA's ambulatory surgery web site as well as procedures not listed on TMA's ambulatory surgery web site, the following rule is to be followed. Each service is to be reimbursed according to the method appropriate to it. That is, the allowable amount for procedures listed on TMA's ambulatory surgery web site is to be based on the appropriate group payment amount while the allowable amount for procedures not listed on TMA's ambulatory surgery web site is to be based on the process in paragraph III.B. Regardless of the method used for determining the reimbursement for each procedure, only one procedure (the procedure which allows the greatest payment) is to be reimbursed at 100%. All other procedures are to be reimbursed at 50%. If the contractor is unable to determine the charges for each procedure (i.e., a single billed charge is made for all procedures), the contractor is to develop the claim for the charges using the steps contained in the TRICARE Operations Manual (TOM). If development does not result in usable charge data, the contractor is to reimburse the major

procedure (the procedure for which the greatest amount is allowed) if that can be determined (e.g., the major procedure is on TMA's ambulatory surgery web site or is identified on the claim) and deny the other procedures using EOB message "Requested information not received". If the major procedure cannot be determined, the entire claim is to be denied.

(2) Discounting for Bilateral Procedures.

(a) Following are the different categories/classifications of bilateral procedures:

1 Conditional bilateral (i.e., procedure is considered bilateral if the modifier 50 is present).

2 Inherent bilateral (i.e., procedure in and of itself is bilateral).

3 Independent bilateral (i.e., procedure is considered bilateral if the modifier 50 is present, but full payment should be made for each procedure (e.g., certain radiological procedures).

(b) Terminated bilateral procedures or terminated procedures with units greater than one should not occur. Line items with terminated bilateral procedures or terminated procedures with units greater than one are denied.

(c) Inherent bilateral procedures will be treated as a non-bilateral procedure since the bilateralism of the procedure is encompassed in the code.

(3) Modifiers for Discounting Terminated Surgical Procedures.

(a) Industry standard modifiers may be billed on outpatient hospital or individual professional claims to further define the procedure code or indicate that certain reimbursement situations may apply to the billing. Recognition and utilization of modifiers are essential for ensuring accurate processing and payment of these claim types.

(b) Industry standard modifiers are used to identify surgical procedures which have been terminated prior to and after the delivery of anesthesia.

1 Modifiers 52 and 73 are used to identify a surgical procedure that is terminated prior to the delivery of anesthesia and is reimbursed at 50% of the allowable; i.e., the ASC tier rate, the Ambulatory Payment Classification (APC) allowable amount for OPPS claims, or the CHAMPUS Maximum Allowable Charge (CMAC) for individual professional providers.

2 Modifiers 53 and 74 are used for terminated surgical procedures after delivery of anesthesia which are reimbursed at 100% of the appropriated allowable amounts referenced above.

(4) Unbundling of Procedures. Contractors should ensure that reimbursement for claims involving multiple procedures conforms to the unbundling guidelines as outlined in Chapter 1, Section 3.

(5) Incidental Procedures. The rules for reimbursing incidental procedures as contained in Chapter 1, Section 3, are to be applied to ambulatory surgery procedures reimbursed under the rules set forth in this section. That is, no reimbursement is to be made for incidental procedures performed in conjunction with other procedures which are not classified as incidental. This limitation applies to payments for facility claims as well as to professional services.

6. Updating Payment Rates.

a. The rates will be updated annually by TMA by the same update factor as is used in the Medicare annual updates for ASC payments. Periodically the rates will be recalculated using the steps in paragraph III.A.4.d.

b. The rates were updated by 3.0% effective November 1, 2002. This update included the wage indexes as updated by Medicare.

c. The group payment rates that are effective November 1, 2003, have been recalculated using the steps in paragraph III.A.4.d. However, we used 100 claims rather than 25 claims to calculate a rate for individual procedures, because it produced more statistically valid results while still resulting in calculated rates for about 83% of TRICARE ambulatory surgery services. In addition, the rates were updated by the Medicare update factor of 2.0% and included the wage indexes as updated by Medicare.

d. The rates were reduced by 2.0% effective April 1, 2004.

B. Reimbursement for procedures not listed on TMA's ambulatory surgery web site. Prior to January 28, 2000, these procedures were to be denied if performed in an ASC and reimbursed in accordance with Chapter 1, Section 24. Effective January 28, 2000, ambulatory surgery procedures that are not listed on TMA's ambulatory surgery web site, and are performed in either a freestanding ASC or hospital may be cost-shared. These procedures are reimbursed at the lessor of billed charges or network discount. On May 1, 2009 (implementation of OPPS), these non-ASC procedures are subject to Chapter 13 discounting of surgical, bilateral and terminated procedures.

C. Reimbursement System On Or After May 1, 2009 (Implementation of OPPS).

1. For ambulatory surgery procedures performed in an OPPS qualified facility, the provisions in Chapter 13 shall apply.

2. For ambulatory surgery procedures performed in freestanding ASCs and non-OPPS facilities, the provisions in paragraph III.A. shall apply, except as follows:

a. Contractors will no longer be allowed to group other procedures not listed on TMA's ambulatory surgery web site. On May 1, 2009 (implementation of OPPS), these groupers will be end dated. Only ambulatory surgery procedures listed on TMA's ambulatory surgery web site are to be grouped.

b. Multiple and Terminated Procedures. For services rendered on or after May 1, 2009 (implementation of OPPS), the professional services shall be reimbursed according to the multiple surgery guidelines in Chapter 13, Section 3, paragraph III.A.5.b. and c.

c. Discounting for Multiple Surgical Procedures. For services rendered on or after May 1, 2009 (implementation of OPPS), discounting for multiple surgical procedures are subject to the provisions in Chapter 13, Section 1.

d. Discounting for Bilateral Procedures. For services rendered on or after May 1, 2009 (implementation of OPPS), bilateral procedures will be discounted based on the application of discounting formulas appearing in Chapter 13, Section 3, paragraph III.A.5.c.(6) and (7).

D. Claims for Ambulatory Surgery.

1. Claims for facility charges must be submitted on a CMS 1450 UB-04. Claims for professional charges may be submitted on either a CMS 1450 UB-04 or a CMS 1500 (08/05) claim form. The preferred form is the CMS 1500 (08/05). When professional services are billed on a CMS 1450 UB-04, the information on the CMS 1450 UB-04 should indicate that these services are professional in nature and be identified by the appropriate CPT-4 code and revenue code.

2. Claim Data.

a. Billing Data. The claim must identify all procedures which were performed (by CPT-4 or HCPCS code). The facility claim shall be submitted on the CMS 1450 UB-04, the procedure code will be shown in Form Locator (FL) 44.

b. TRICARE Encounter Data (TED). All ambulatory surgery services are to be reported on the TED using the appropriate CPT-4 code. The only exception is services which are billed using a HCPCS code and for which no CPT-4 code exists.

E. Wage Index Changes. If, during the year, Medicare revises any of the wage indexes used for ambulatory surgery reimbursement, such changes will not be incorporated into the TRICARE payment rates until the next routine update. These changes will not be incorporated regardless of the reason Medicare revised the wage index.

F. Subsequent Hospital Admissions. If a beneficiary is admitted to a hospital subject to the DRG-based payment system as a result of complications, etc. of ambulatory surgery, the

ambulatory surgery procedures are to be billed and reimbursed separately from the hospital inpatient services. The same rules applicable to emergency room services are to be followed.

G. Cost-Shares for Ambulatory Surgery Procedures. All surgical procedures performed in an outpatient setting shall be cost-shared at the ASC cost-sharing levels. Refer to Chapter 2, Section 1, paragraph I.C.3.g.

- END -

CHAPTER 13

OUTPATIENT PROSPECTIVE PAYMENT SYSTEM (OPPS) - AMBULATORY PAYMENT CLASSIFICATIONS (APCS)

SECTION	SUBJECT	
1	General	
2	Billing And Coding Of Services Under APC Groups	
	FIGURE 13-2-1	Groups Of Cardiac Electrophysiologic Evaluation And Ablation Procedures On Which The Composite APC Is Based
	FIGURE 13-2-2	Composite APCs And Criteria For Composite Payment
	FIGURE 13-2-3	Revenue And HCPCS Level I And II Codes Used In Billing For Partial Hospitalization Services And Other Mental Health Services Outside Partial Hospitalization For CY 2008
	FIGURE 13-2-4	PHP For CY 2008
	FIGURE 13-2-5	Reporting Of Partial Hospitalization Services Spanning Two Or More Dates - HIPAA 837 Format
	FIGURE 13-2-6	Reporting Of Partial Hospitalization Services Spanning Two Or More Dates - CMS 1450 Format
	FIGURE 13-2-7	Criteria For Payment Of Extended Assessment And Management Composite APCs
	FIGURE 13-2-8	Required Diagnoses For Maternity
	FIGURE 13-2-9	Billing For Bone Marrow And Stem Cell Processing Services
	FIGURE 13-2-10	Comprehensive List Of Brachytherapy Sources Paid Under Cost-To-Charge Methodology Up Through January 1, 2010
	FIGURE 13-2-11	New HCPCS Codes Effective For Certain Drugs, Biologicals, And Radiopharmaceuticals In CY 2008
	FIGURE 13-2-12	HCPCS Code And Dosage Descriptor Changes Effective For Certain Drugs, Biologicals And Radiopharmaceuticals In CY 2008
	FIGURE 13-2-13	New Drug Codes Separately Payable Under Opps As Of January 1, 2008
	FIGURE 13-2-14	Comprehensive List Of Therapeutic Radiopharmaceuticals Payable As Of January 1, 2008
	FIGURE 13-2-15	New Drug Administration Cpt Codes Effective In CY 2008

SECTION	SUBJECT	
	FIGURE 13-2-16	HCPCS Code(s) For Billing Echocardiograms With Contrast
3	Prospective Payment Methodology	
	FIGURE 13-3-1	List Of Revenue Centers Packaged Into Major HCPCS Codes When Appearing In The Same Claim
	FIGURE 13-3-2	Discounting Formulas For Bilateral Procedures
	FIGURE 13-3-3	Application Of Discounting Formulas
	FIGURE 13-3-4	TTPA Adjustment Percentages For 10 Visit APC Codes
	FIGURE 13-3-5	Application Of TTPA And TMCPA Adjustments For ER Visits
	FIGURE 13-3-6	Drugs And Biologicals With Pass-Through Status In CY 2008
	FIGURE 13-3-7	Antiemetics Exempted From CY 2008 $60 Packaging Threshold
	FIGURE 13-3-8	Crosswalk From HCPCS Level I[1] Codes For Drug Administration To Drug Administration APCs
	FIGURE 13-3-9	Non-Chemotherapy Prolonged Infusion Codes That Require A Pump
	FIGURE 13-3-10	Vaccine Administration Codes And Status Indicators
	FIGURE 13-3-11	Assignment Of Blood And Blood Product Codes
	FIGURE 13-3-12	Devices For Which "FC" And "FB" Modifiers Must Be Reported With The Procedure When Furnished Without Cost Or At Full Or Partial Credit For A Replacement Device
	FIGURE 13-3-13	Adjustments To APCs In Cases Of Devices Reported Without Cost Or For Which Full Or Partial Credit Is Received For CY 2008
	FIGURE 13-3-14	Final HCPCS Codes To Be Used To Report ED Visits Provided In Type B EDs
	FIGURE 13-3-15	Assignment Of CPT E/M Codes And Other HCPCS Codes To New Visit APCs For CY 2007
	FIGURE 13-3-16	Proportional Payment For "T" Line Items
4	Claims Submission And Processing Requirements	
	FIGURE 13-4-1	Actions Taken When Multiple Medical Visits Occur On The Same Day

SECTION	SUBJECT
5	Medical Review And Allowable Charge Review Under The Outpatient Prospective Payment System (OPPS)
ADDENDUM A1	Development Schedule For TRICARE OCE/APC Quarterly Update
ADDENDUM A2	OPPS OCE Notification Process For Quarterly Updates
ADDENDUM A3	Approval Of OPPS - OCE/APC And NGPL Quarterly Update Process

CHAPTER 13
SECTION 1

GENERAL

ISSUE DATE: July 27, 2005
AUTHORITY: 10 U.S.C. 1079(j)(2) and 10 U.S.C. 1079(h)

I. APPLICABILITY

This policy is mandatory for the reimbursement of services provided either by network or non-network providers. However, alternative network reimbursement methodologies are permitted when approved by the TRICARE Management Activity (TMA) and specifically included in the network provider agreement.

II. ISSUE

A general overview of the coverage and reimbursement of hospital outpatient services.

III. POLICY

A. Statutory Background.

Under 10 United States Code (USC) 1079(j)(2), the amount to be paid to hospitals, skilled nursing facilities (SNFs), and other institutional providers under TRICARE may, by regulation, be established "to the extent practicable in accordance with the same reimbursement rules as apply to payments to providers of services of the same type under Medicare." Similarly, under 10 USC 1079(h), the amount to be paid to health care professionals and other non-institutional health care providers "shall be equal to an amount determined to be appropriate, to the extent practicable, in accordance with the same reimbursement rules used by Medicare." Based on these statutory provisions, TRICARE will adopt Medicare's prospective payment system for reimbursement of hospital outpatient services currently in effect for the Medicare program as required under the Balanced Budget Act of 1997 (BBA 1997), (Public Law (PL) 105-33) which provided comprehensive provisions for establishment of a hospital Outpatient Prospective Payment System (OPPS). The Act required development of a classification system for covered outpatient services that consisted of groups arranged so that the services within each group were comparable clinically and with respect to the use of resources. The Act described the method for determining the Medicare payment amount and the beneficiary coinsurance amount for services covered under the OPPS. This included the formula for calculating the conversion factor and data requirements for establishing relative payment weights.

Centers for Medicare and Medicaid Services (CMS) published a proposed rule in the **Federal Register** (FR) on September 8, 1998 (63 FR 47552) setting forth the proposed PPS for

hospital outpatient services. On June 30, 1999, a correction notice was published (64 FR 35258) to correct a number of technical and typographical errors contained in the September 8, 1998 proposed rule.

Subsequent to publication of the proposed rule, the Balanced Budget Refinement Act of 1999 (BBRA 1999 - enacted on November 29, 1999) made major changes that affected the proposed OPPS. The following BBRA 1999 provisions were implemented in a Final Rule (65 FR 18434) published on April 7, 2000):

1. Made adjustments for covered services whose costs exceeded a given threshold (i.e., an outlier payment).

2. Established transitional pass-through payments for certain medical devices, drugs, and biologicals.

3. Placed limitations on judicial review for determining outlier payments and the determination of additional payments for certain medical devices, drugs, and biologicals.

4. Included as covered outpatient services implantable prosthetics and Durable Medical Equipment (DME) and diagnostic x-ray, laboratory, and other tests associated with those implantable items.

5. Limited the variation of costs of services within each payment classification group by providing that the highest median cost for an item or service within the group cannot be more than two times greater than the lowest median cost for an item or service within the group (referred to as the "two times rule"). An exception to this requirement may be made in unusual cases, such as low volume items and services, but may not be made in the case of a drug or biological that has been designated as an orphan drug under Section 526 of the Federal Food, Drug and Cosmetic Act.

6. Required at least annual review of the groups, relative payment weights, and the wage and other adjustments to take into account changes in medical practice, the addition of new services, new cost data, and other relevant information or factors.

7. Established transitional corridors that would limit payment reductions under the hospital OPPS.

8. Established hold harmless provisions for rural and cancer hospitals.

B. Participation Requirement.

In order to be an authorized provider under the TRICARE OPPS, an institutional provider must be a participating provider for all claims in accordance with 32 CFR 199.6(a)(8).

C. Unbundling Provisions.

As a prelude to implementation of the OPPS, the Omnibus Budget Reconciliation Act of 1996 (OBRA 1996) prohibited payment for nonphysician services furnished to hospital

patients (inpatients and outpatients), unless the services were furnished either directly or under arrangement with the hospital except for services of physician assistants, nurse practitioners and clinical nurse specialists. This facilitated the payment of services included within the scope of each Ambulatory Payment Classification (APC). The Act provided for the imposition of civil money penalties not to exceed $2,000, and a possible exclusion from participation in Medicare, Medicaid and other Federal health care programs for any person who knowingly and willfully presents, or causes to be presented, a bill or request for payment for a hospital outpatient service that violates the requirement for billing subject to the following exceptions:

1. Payment for clinical diagnostic lab may be made only to the person or entity that performed or supervised the performance of the test. In the case of a clinical diagnostic laboratory test that is provided under arrangement made by a hospital or Critical Access Hospital (CAH), payment is made to the hospital. The hospital is not responsible for billing for the diagnostic test if a hospital patient leaves the hospital and goes elsewhere to obtain the diagnostic test.

2. Skilled Nursing Facility (SNF) consolidated billing requirements do not apply to the following exceptionally intensive hospital outpatient services:

a. Cardiac catheterization;

b. Computerized Axial Tomography (CAT) scans;

c. Magnetic Resonance Imagings (MRIs);

d. Ambulatory surgery involving the use of an operating room;

e. Emergency Room (ER) services;

f. Radiation therapy;

g. Angiography; and

h. Lymphatic and venous procedures.

NOTE: The above procedures are subject to the bundling requirements while the beneficiary is temporarily absent from the SNF. The beneficiary is now considered to be a hospital outpatient and the services are subject to hospital outpatient bundling requirements.

D. Applicability and Scope of Coverage.

Following are the providers and services for which TRICARE will make payment under the OPPS.

1. Provider Categories.

a. Providers Included In OPPS:

(1) All hospitals participating in the Medicare program, except for those excluded under paragraph III.D.1.b.

(2) Hospital-based Partial Hospitalization Programs (PHPs) that are subject to the more restrictive TRICARE authorization requirements under 32 CFR 199.6(b)(4)(xii). Following are the specific requirements for authorization and payment under the Program:

(a) Be certified pursuant to TRICARE certification standards.

(b) Be licensed and fully operational for a period of six months (with a minimum patient census of at least 30 percent of bed capacity) and operate in substantial compliance with state and federal regulations.

(c) Currently accredited by the Joint Commission on Accreditation of Healthcare Organizations (JCAHO) under the current edition of the **Accreditation Manual for Mental Health, Chemical Dependency, and Mental Retardation/Development Disabilities Services**.

(d) Has a written participation agreement with TRICARE.

(3) Hospitals or distinct parts of hospitals that are excluded from the inpatient Diagnosis Related Groups (DRG) to the extent that the hospital or distinct part furnishes outpatient services.

NOTE: All hospital outpatient departments will be subject to the OPPS unless specifically excluded under this chapter. The marketing contractor will have responsibility for educating providers to bill under the OPPS even if they are not a Medicare participating/certified provider (i.e., not subject to the DRG inpatient reimbursement system).

b. Providers Excluded From OPPS:

(1) Outpatient services provided by hospitals of the Indian Health Service (IHS) will continue to be paid under separately established rates.

(2) Certain hospitals in Maryland that qualify for payment under the state's cost containment waiver.

(3) CAHs. The contractors shall monitor TMA's web site at http://www.tricare.mil/hospitalclassification for quarterly updates to the critical access hospital list

and update their systems to reflect the most current information on the list. For additional information on CAHs, refer to Chapter 15, Section 1.

(4) Hospitals located outside one of the 50 states, the District of Columbia, and Puerto Rico.

(5) Specialty care providers to include:

(a) Cancer and children's hospitals.

(b) Freestanding Ambulatory Surgery Centers (ASCs).

(c) Freestanding PHPs, Psych and Substance Use Disorder Rehabilitation Facilities (SUDRFs).

(d) Comprehensive Outpatient Rehabilitation Facilities (CORFs).

(e) Home Health Agencies (HHAs).

(f) Hospice programs.

(g) Community Mental Health Centers (CMHCs).

NOTE: CMHC PHPs have been excluded from provider authorization and payment under the OPPS due to their inability to meet the more stringent certification criteria currently imposed for hospital-based and freestanding PHPs under the Program.

(h) Other corporate services providers (e.g., Freestanding Cardiac Catheterization, Sleep Disorder Diagnostic Centers, and Freestanding Hyperbaric Oxygen Treatment Centers).

NOTE: Antigens, splints, casts and hepatitis B vaccines furnished outside the patient's plan of care in CORFs, HHAs and hospice programs will continue to receive reimbursement under current TRICARE allowable charge methodology.

(i) Freestanding Birthing Centers.

(j) Veterans Affairs (VA) hospitals.

(k) Freestanding End Stage Renal Dialysis (ESRD) Facilities.

(l) SNFs.

2. Scope of Services.

a. Services excluded under the hospital OPPS and paid under the CHAMPUS Maximum Allowable Charge (CMAC) or other TRICARE recognized allowable charge methodology.

(1) Physician services.

(2) Nurse practitioner and clinical nurse specialist services.

(3) Physician assistant services.

(4) Certified nurse-midwife services.

(5) Services of qualified psychologists.

(6) Clinical social worker services.

(7) Services of an anesthetist.

(8) Screening and diagnostic mammographies.

(9) Influenza and pneumococcal pneumonia vaccines.

NOTE: Hospitals, HHAs, and hospices will continue to receive CMAC payments for influenza and pneumococcal pneumonia vaccines due to considerable fluctuations in their availability and cost.

(10) Clinical diagnostic laboratory services.

(11) Take home surgical dressings.

(12) Non-implantable DME, orthotics, prosthetics, and prosthetic devices and supplies (DMEPOS) paid under the DMEPOS fee schedule when the hospital is acting as a supplier of these items.

(a) An item such as crutches or a walker that is given to the patient to take home, but that may also be used while the patient is at the hospital, would be paid for under the hospital OPPS.

(b) Payment may not be made for items furnished by a supplier of medical equipment and supplies unless the supplier obtains a supplier number. However, since there is no reason to split a claim for DME payment under TRICARE, a separate supplier number will not be required for a hospital to receive reimbursement for DME.

(13) Hospital outpatient services furnished to SNF inpatients as part of his or her resident assessment or comprehensive care plan that are furnished by the hospital "under arrangements" but billable only by the SNF.

(14) Services and procedures designated as requiring inpatient care.

(15) Services excluded by statute (excluded from the definition of "covered Outpatient Department (OPD) Services"):

(a) Ambulance services;

(b) Physical therapy;

(c) Occupational therapy;

(d) Speech-language pathology.

NOTE: The above services are subject to the CMAC or other TRICARE recognized allowable charge methodology (e.g., statewide prevailings).

(16) Ambulatory surgery procedures performed in freestanding ASCs will continue to be reimbursed under the per diem system established in Chapter 9, Section 1 of this manual.

b. Costs excluded under the hospital OPPS:

(1) Direct cost of medical education activities.

(2) Costs of approved nursing and allied health education programs.

(3) Costs associated with interns and residents not in approved teaching programs.

(4) Costs of teaching physicians.

(5) Costs of anesthesia services furnished to hospital outpatients by qualified non-physician anesthetists (certified registered nurse anesthetists (CRNA) and anesthesiologists' assistants (AAs)) employed by the hospital or obtained under arrangements, for hospitals.

(6) Bad debts for uncollectible and coinsurance amounts.

(7) Organ acquisition costs.

(8) Corneal tissue acquisition costs incurred by hospitals that are paid on a reasonable cost basis.

c. Services included in payment under the OPPS (not an all-inclusive list).

(1) Hospital-based full- and half-day PHPs (psych and SUDRFs) which are paid a per diem OPPS. Partial hospitalization is a distinct and organized intensive psychiatric outpatient day treatment program, designed to provide patients who have profound and

disabling mental health conditions with an individualized, coordinated, comprehensive, and multidisciplinary treatment program.

(2) All hospital outpatient services, except those that are identified as excluded. The following are services that are included in OPPS:

(a) Surgical procedures.

NOTE: Hospital-based ASC procedures will be included in the OPPS/APC system even though they are currently paid under the ASC grouper system. The new OPPS/APC system covers procedures on the ASC list when they are performed in a hospital outpatient department, hospital ER, or hospital-based ASC. ASC group payment will still apply when they are performed in freestanding ASCs.

(b) Radiology, including radiation therapy.

(c) Clinic visits.

(d) Emergency department visits.

(e) Diagnostic services and other diagnostic tests.

(f) Surgical pathology.

(g) Cancer chemotherapy.

(h) Implantable medical items.

1 Prosthetic implants (other than dental) that replace all or part of an internal body organ (including colostomy bags and supplies directly related to colostomy care and including replacement of these devices);

2 Implantable DME (e.g., pacemakers, defibrillators, drug pumps, and neurostimulators)

3 Implantable items used in performing diagnostic x-rays, diagnostic laboratory tests, and other diagnostic tests.

NOTE: Because implantable items are now packaged into the APC payment rate for the service or procedure with which they are associated, certain items may be candidates for the transitional pass-through payment.

(i) Specific hospital outpatient services furnished to a beneficiary who is admitted to a Medicare-participating SNF but who is not considered to be a SNF resident, for purposes of SNF consolidated billing, with respect to those services that are beyond the scope of SNF comprehensive care plans. They include:

1 Cardiac catheterization;

2 CAT scans;

3 MRIs;

4 Ambulatory surgery involving the use of an operating room;

5 ER services;

6 Radiation therapy;

7 Angiography;

8 Lymphatic and venous procedures.

(j) Certain preventive services furnished to healthy persons, such as colorectal cancer screening.

(k) Acute dialysis (e.g., dialysis for poisoning).

(l) ESRD Services. Since TRICARE does not have an ESRD composite rate, ESRD services are included in TRICARE's OPPS.

E. Description of APC Groups.

Group services identified by Healthcare Common Procedure Coding System (HCPCS) codes and descriptors within APC groups are the basis for setting payment rates under the hospital OPPS.

1. Grouping of Procedures/Services Under APC System.

The APC system establishes groups of covered services so that the services within each group are comparable clinically and with respect to the use of resources.

a. Fundamental criteria for grouping procedures/services under the APC system:

(1) *Resource Homogeneity* - The amount and type of facility resources (e.g., operating room time, medical surgical supplies, and equipment) that are used to furnish or perform the individual procedures or services within each APC should be homogeneous. That is, the resources used are relatively constant across all procedures or services even though resource use may vary somewhat among individual patients.

(2) *Clinical Homogeneity* - The definition of each APC group should be "clinically meaningful"; that is, the procedures or services included within the APC group relate generally to a common organ system or etiology, have the same degree of extensiveness, and utilize the same method of treatment - for example, surgical, endoscopic, etc.

(3) *Provider Concentration* - The degree of provider concentration associated with the individual services that comprise the APC is considered. If a particular service is offered only in a limited number of hospitals, then the impact of payment for the services is concentrated in a subset of hospitals. Therefore, it is important to have an accurate payment level for services with a high degree of provider concentration. Conversely, the accuracy of payment levels for services that are routinely offered by most hospitals does not bias the payment system against any subset of hospitals.

(4) *Frequency of Service* - Unless there is a high degree of provider concentration, creating separate APC groups for services that are infrequently performed is avoided. Since it is difficult to establish reliable payment rates for low volume APC groups, HCPCS codes are assigned to an APC that is most similar in terms of resource use and clinical coherence.

F. Basic Reimbursement Methodology.

1. Under the OPPS, hospital outpatient services are paid on a rate-per-service basis that varies according to the APC group to which the service is assigned.

2. The APC classification system is composed of groups of services that are comparable clinically and with respect to the use of resources. Level I and Level II HCPCS codes and descriptors are used to identify and group the services within each APC. Costs associated with items or services that are directly related and integral to performing a procedure or furnishing a service have been packaged into each procedure or service within an APC group with the exception of:

a. New temporary technology APCs for certain approved services that are structured based on cost rather than clinical homogeneity.

b. Separate APCs for certain medical devices, drugs, biologicals, radiopharmaceuticals and devices of brachytherapy under transitional pass-through provisions.

3. Each APC weight represents the median hospital cost of the services included in the APC relative to the median hospital cost of services included in APC 0601, Mid-Level Clinic Visits. The APC weights are scaled to APC 0601 because a mid-level clinic visit is one of the most frequently performed services in the outpatient setting.

4. The items and services within an APC group cannot be considered comparable with respect to the use of resources if the highest median cost for an item or service in the group is more than 2 times greater than the lowest median cost for an item or service within the same group. However, exceptions may be made to the 2 times rule “in unusual cases, such as low volume items and services.”

5. The prospective payment rate for each APC is calculated by multiplying the APC’s relative weight by the conversion factor.

6. A wage adjustment factor will be used to adjust the portion of the payment rate that is attributable to labor-related costs for relative differences in labor and non-labor-related costs across geographical regions.

7. Applicable deductible and/or cost-sharing/copayment amounts will be subtracted from the adjusted APC payment rate based on the eligibility status of the beneficiary at the time outpatient services were rendered (i.e., those deductibles and cost-sharing/copayment amounts applicable to Prime, Extra, and Standard beneficiary categories). TRICARE will retain its current hospital outpatient deductibles, cost-sharing/copayment amounts and catastrophic loss protection under the OPPS.

NOTE: The ASC cost-sharing provision (i.e., assessment of a single copayment for both the professional and facility charge for a Prime beneficiary) will be adopted as long as it is administratively feasible. This will not apply to Extra and Standard beneficiaries since their cost-sharing is based on a percentage of the total bill. The copayment is based on site of service, except for CPT[1]/HCPCS 36400-36416, 59020, 59025, and 59050, for venipuncture and fetal monitoring. Reference Chapter 2, Section 1, paragraph I.B.5.e. and f.

G. Reimbursement Hierarchy For Procedures Paid Outside The OPPS.

1. CMAC Facility Pricing Hierarchy (No Technical Component (TC) Modifier).

a. The following tables includes the list of rate columns on the CMAC file. The columns are number 1 through 6 by description. The pricing hierarchy for facility CMAC is 8, 6, 4, then 2.

COLUMN	DESCRIPTION
1	Non-facility CMAC for physician/LLP class
2	Facility CMAC for physician/LLP class
3	Non-facility CMAC for non-physician class
4	Facility CMAC for non-physician class
5	Physician class Professional Component (PC) rate
6	Physician class Technical Component (TC) rate
7	Non-physician class PC rate
8	Non-physician class TC rate
Description: If non-physician TC > 0, then pay the non-physician TC. Otherwise, if the Physician class TC rate > 0, then pay the physician class TC rate. Otherwise, if the Facility CMAC for non-physician class > 0, then pay the Facility CMAC for non-physician class. Otherwise, pay Facility CMAC for physician/LLP class.	

NOTE: Hospital-based therapy services, i.e., Occupational Therapy (OT), Physical Therapy (PT), and Speech Therapy (ST), shall be reimbursed at the non-facility CMAC for physician/LLP class.

b. If there is no CMAC available, the contractor shall reimburse the procedure under DMEPOS.

[1] CPT only © 2006 American Medical Association (or such other date of publication of CPT). All Rights Reserved.

2. DMEPOS. If there is no DMEPOS available, the contractor shall reimburse the procedure using state prevailings.

3. State Prevailing Rate. If there is no state prevailing rate available, the contractor shall reimburse the procedure based on billed charges.

H. Outpatient Code Editor (OCE).

1. The OCE with APC program edits patient data to help identify possible errors in coding and assigns APC numbers based on HCPCS codes for payment under the OPPS. The OPPS is an outpatient equivalent of the inpatient, DRG-based PPS. Like the inpatient system based on DRGs, each APC has a pre-established prospective payment amount associated with it. However, unlike the inpatient system that assigns a patient to a single DRG, multiple APCs can be assigned to one outpatient record. If a patient has multiple outpatient services during a single visit, the total payment for the visit is computed as the sum of the individual payments for each service. Updated versions of the OCE (MF cartridge) and data files CD, along with installation and user manuals, will be shipped from the developer to the contractors. The contractors will be required to replace the existing OCE with the updated OCE within 21 calendar days of receipt. See Chapter 13, Addendum A1, for quarterly review/update process.

2. The OCE incorporates the National Correct Coding Initiatives (NCCI) edits used by the CMS to check for pairs of codes that should not be billed together for the same patient on the same day. Claims reimbursed under the OPPS methodology are exempt from the claims auditing software referenced in Chapter 1, Section 3.

3. Under certain circumstances (e.g., active duty claims), the contractor may override claims that are normally not payable.

4. CMS has agreed to the use of 900 series numbers (900-999) within the OCE for TRICARE specific edits.

NOTE: The questionable list of covered services may be different among the contractors. Providers will need to contact the contractor directly concerning these differences.

I. PRICER Program.

1. The APC PRICER will be straightforward in that the site-of-service wage index will be used to wage adjust the payment rate for the particular APC HCPCS Level I and II code (e.g., a HCPCS code with a designated Status Indicator (SI) of S, T, V, or X) reported off of the hospital outpatient claim. The PRICER will also apply discounting for multiple surgical procedures performed during a single operative session and outlier payments for extraordinarily expensive cases. TMA will provide the contractor's a common TRICARE PRICER to include quarterly updates. The contractors will be required to replace the existing PRICER with the updated PRICER within 21 days of receipt.

NOTE: Claims received with service dates on or after the OPPS quarterly effective dates (i.e., January 1, April 1, July1 and October 1 of each calendar year) but prior to 21 days

from receipt of either the OPPS OCE or PRICER update cartridge may be considered excluded claims as defined by the TOM, Chapter 1, Section 3, paragraph 1.3.2.

2. The contractors shall provide 3M with those pricing files to maintain and update the TRICARE OPPS PRICER within five weeks prior to the quarterly update. For example, statewide prevailings for ambulance services and state specific non-professional component birthing center rates. Appropriate deductible, cost-sharing/copayment amounts and catastrophic caps limitations will be applied outside the PRICER based on the eligibility status of the TRICARE beneficiary at the time the outpatient services were rendered.

J. Geographical Wage Adjustments.

DRG wage indexes will be used for adjusting the OPPS standard payment amounts for labor market differences. Refer to the OPPS Provider File with Wage Indexes on TMA's OPPS home page at http://www.tricare.mil/opps for annual OPPS wage index updates. The annual DRG wage index updates will be effective January 1 of each year for the OPPS.

K. Provider-Based Status for Payment Under OPPS.

An outpatient department, remote location hospital, satellite facility, or provider-based entity must be either created or acquired by a main provider (hospital) for the purpose of furnishing health care services of the same type as those furnished by the main provider under the name, ownership, and financial/administrative control of the main provider, in order to qualify for payment under the OPPS. The CMS will retain sole responsibility for determining provider-based status under the OPPS.

L. Implementing Instructions.

Since this issuance only deals with a general overview of the OPPS reimbursement methodology, the following cross reference is provided to facilitate access to specific implementing instructions within Chapter 13, Section 1 through 5:

IMPLEMENTING INSTRUCTIONS/SERVICES	
POLICIES	
General Overview	Chapter 13, Section 1
Billing and Coding of Services under APC Groups	Chapter 13, Section 2
Reimbursement Methodology	Chapter 13, Section 3
Claims Submission and Processing Requirements	Chapter 13, Section 4
Medical Review And Allowable Charge Review Under The Hospital OPPS	Chapter 13, Section 5
ADDENDA	
Development Schedule for TRICARE OCE/APC - Quarterly Update	Chapter 13, Addendum A1
OPPS OCE Notification Process for Quarterly Updates	Chapter 13, Addendum A2

M. OPPS Data Elements Available on TMA's web site.

The following data elements are available on TMA's OPPS web site at http://www.tricare.mil/opps.

1. APCs with SIs and Payment Rates.

2. Payment SI by HCPCS Code.

3. Payment SIs/Descriptions.

4. CPT Codes That Are Paid Only as Inpatient Procedures.

5. Statewide Cost-to-Charge Ratios (CCRs).

6. OPPS Provider File with Wage Indexes for Urban and Rural Areas, uses same wage indexes as TRICARE's DRG-based payment system, except effective date is January 1 of each year for OPPS.

7. Zip to Wage Index Crosswalk.

IV. EFFECTIVE DATE May 1, 2009.

- END -

CHAPTER 13
SECTION 2

BILLING AND CODING OF SERVICES UNDER APC GROUPS

ISSUE DATE: July 27, 2005
AUTHORITY: 10 U.S.C. 1079(j)(2) and 10 U.S.C. 1079(h)

I. APPLICABILITY

This policy is mandatory for the reimbursement of services provided either by network or non-network providers. However, alternative network reimbursement methodologies are permitted when approved by TRICARE Management Activity (TMA) and specifically included in the network provider agreement.

II. ISSUE

The billing and coding requirements for reimbursement under the hospital Outpatient Prospective Payment System (OPPS).

III. POLICY

A. To receive TRICARE Reimbursement under the OPPS providers must follow and contractors shall enforce all Medicare specific coding requirements.

NOTE: TMA will develop specific Ambulatory Payment Classifications (APCs) (those beginning with a "T") for those services that are unique to the TRICARE beneficiary population (e.g., maternity care). Reference TMA's OPPS web site at http://www.tricare.mil/opps for a listing of TRICARE APCs.

B. Packaging of Services Under APC Groups.

1. The prospective payment system establishes a national payment rate, standardized for geographic wage differences, that includes operating and capital-related costs that are directly related and integral to performing a procedure or furnishing a service on an outpatient basis. These costs include, but are not limited to:

a. Use of an operating suite.

b. Procedure room or treatment room.

c. Use of the recovery room or area.

d. Use of an observation bed.

e. Anesthesia, certain drugs, biologicals, and other pharmaceuticals; medical and surgical supplies and equipment; surgical dressings; and devices used for external reduction of fractures and dislocations.

f. Supplies and equipment for administering and monitoring anesthesia or sedation.

g. Intraocular lenses (IOLs).

h. Capital-related costs.

i. Costs incurred to procure donor tissue other than corneal tissue.

j. Incidental services such as venipuncture.

k. Implantable items used in connection with diagnostic X-ray testing, diagnostic laboratory tests, and other diagnostics.

l. Implantable prosthetic devices (other than dental) which replace all or part of an internal body organ (including colostomy bags and supplies directly related to colostomy care), including replacement of these devices.

2. Costs associated with certain expensive procedures and services are not packaged within an APC payment rate. Instead, separate APC payment will be made for these particular items and services under the OPPS. Additional payments will be provided for certain packaged medical devices, drugs, and biologicals that are eligible for transitional pass-throughs (i.e., payments for expensive drugs or devices that are temporarily reimbursed in addition to the APC amount for the service or procedure to which they are normally associated), while strapping and casting will be paid under two new APC groupings (0058 and 0059).

a. Costs of drugs, biologicals and devices packaged into APCs to which they are normally associated.

The costs of drugs, biologicals and pharmaceuticals are generally packaged into the APC payment rate for the primary procedure or treatment with which the drugs are usually furnished. No separate payment is made under the OPPS for drugs, biologicals and pharmaceuticals whose costs are packaged into the APCs with which they are associated.

(1) For the drugs paid under the OPPS, hospitals can bill both for the drug and for the administration of the drug.

(2) The overhead cost is captured in the administration codes, along with the costs of all drugs that are not paid for separately.

(3) Each time a drug is billed with an administration code, the total payment thus includes the acquisition cost for the billed drug, the packaged cost of all other drugs and the overhead.

b. Separate payment of drugs, biologicals and devices outside the APC amounts of the services to which they are normally associated.

(1) Special transitional pass-through payments (additional payments) made for at least 2 years, but not more than three years for the following drugs and biologicals:

(a) Current orphan drugs, as designated under section 526 of the Federal Food, Drugs, and Cosmetic Act;

(b) Current drugs and biological agents used for treatment of cancer;

(c) Current radiopharmaceutical drugs and biological products; and

(d) New drugs and biologic agents in instances where the item was not being paid as a hospital outpatient service as of December 31, 1996, and where the cost of the item is "not insignificant" in relation to the hospital OPPS payment amount.

NOTE: The process to apply for transitional pass-through payment for eligible drugs and biological agents can be found on the Centers for Medicare and Medicaid Services (CMS) web site: http://www.cms.hhs.gov. The TRICARE contractors will not be required to review applications for pass through payment.

(2) Separate APC payment for drugs and radiopharmaceuticals for which the median cost per line exceeds $60, with the exception of injectable and oral forms of antiemetics.

(3) Separately payable radiopharmaceuticals, drugs and biologicals classified as "specified covered outpatient drugs" for which payment was made on a pass-through basis on or before December 31, 2002, and a separate APC exists.

(4) Separate payment for new drugs and biologicals that have assigned Healthcare Common Procedure Coding System (HCPCS) codes, but that do not have a reference Average Wholesale Price (AWP), approval for pass-through payment or hospital claims data.

(5) Drugs and biologicals that have not been eligible for pass-through status but have been receiving nonpass-through payments since implementation of the Medicare OPPS.

(6) Separate payment for new drugs, biologicals and radiopharmaceuticals enabling hospitals to begin billing for drugs and biologicals that are newly approved by the FDA, and for which a HCPCS code has not yet been assigned by the National HCPCS Alpha-Numeric Workgroup.

(7) Special APC groups that have been created to accommodate payment for new technologies. The drugs, biologicals and pharmaceuticals that are incorporated into these new technology APCs are paid separately from, and in addition to, the procedure or treatment with which they are associated yet are not eligible for transitional pass-through payment.

(8) New drugs, biologicals and devices which qualify for separate payment under OPPS, but have not yet been assigned to a transitional APC (i.e., assigned to a temporary APC for separate payment of an expensive drug or device) will be reimbursed under TRICARE standard allowable charge methodology. This allowable charge payment will continue until a transitional APC has been assigned (i.e., until CMS has had the opportunity to assign the new drug, biological or device to a temporary APC for separate payment).

NOTE: The contractors will not be held accountable for the development of transitional APC payments for new drugs, biologicals or devices.

c. Corneal tissue acquisition costs.

(1) Corneal tissue acquisition costs not packaged into the payment rate for corneal transplant surgical procedures.

(2) Separate payment will be made based on the hospital's reasonable costs incurred to acquire corneal tissue.

(3) Corneal acquisition costs must be submitted using HCPCS code V2785 (Processing, Preserving and Transporting Corneal Tissue), indicating the acquisition cost rather than the hospital's charge on the bill.

d. Costs for other procedures or services not packaged in the APC payment.

(1) Blood and blood products, including anti-hemophilic agents.

(2) Casting, splinting and strapping services.

(3) Immunosuppressive drugs for patients following organ transplant.

(4) Certain other high cost drugs that are infrequently administered.

NOTE: New APC groups have been created for these items and services, which allows separate payment.

e. Reporting Requirements for Device Dependent Procedures.

Hospitals are required to bill all device-dependent procedures using the appropriate "C" codes for the devices. Following are provisions related to the required use of "C" codes:

(1) Hospitals are required to report device category codes on claims when such devices are used in conjunction with procedure(s) billed and paid for under the OPPS in order to improve the claims data used annually to update the OPPS payment rates.

(2) The Outpatient Code Editor (OCE) will include edits to ensure that certain procedure codes are accompanied by an associated device category code:

(a) These edits will be applied at the HCPCS I and II code levels rather than at the APC level.

(b) They will not apply when a procedure code is reported with a modifier 52, 73, or 74 to designate an incomplete procedure.

f. Changes to Packaged Services for CY 2008 OPPS. Effective for services furnished on or after January 1, 2008, seven additional categories of HCPCS codes describing ancillary and supportive services have been packaged either conditionally or unconditionally, and four new composited APCs have been created.

(1) Each ancillary and supportive service HCPCS code has a Status Indicator (SI) of either **N** or **Q**.

(a) The payment for a HCPCS code with a SI of **N** is unconditionally packaged so that payment is always incorporated into the payments for the separately paid services with which it is reported.

(b) Payment for a HCPCS code with a SI of **Q** that is "**STVX**-packaged" is packaged unless the HCPCS code is not reported on the same day with a service that has a SI of **S**, **T**, **V**, or **X**, in which case it would be paid separately.

(c) Payment for a HCPCS code with a SI of "**T** packaged" is packaged unless the HCPCS code is not reported on the same day with a service that has a SI of **T**, in which case it would be paid separately.

(d) Payment for a HCPCS code with a SI of **Q** that is assigned to a composite APC is packaged into the payment for the composite APC when the criteria for payment of the composite APC are met.

(2) Categories of ancillary and supportive services for which the packaging status is changed for CY 2008 are as follows:

(a) Guidance services.

(b) Imaging processing services.

(c) Intraoperative services.

(d) Imaging supervision and interpretation services.

1 Certain imaging supervision and interpretation services are always packaged.

2 Others are packaged when the service appears on the same claim with a procedural HCPCS code that has been assigned SI **T**. These codes are **T** packaged codes.

(e) Diagnostic radiopharmaceuticals. Beginning in January 2008, claims for nuclear medicine procedures must contain a code for a diagnostic radiopharmaceutical to be processed to payment.

(f) Contrast media. New Level II HCPCS C-codes have been created for reporting echocardiography services with contrast beginning in CY 2008.

(g) Observation services.

1 CMS created two composite APCs, APCs 8002 and 8003, for Extended Assessment and Management of which observation care is a component.

2 When eight hours or more of observation care is provided in conjunction with direct admission to observation or a high level clinical or Emergency Department (ED) visit or critical care services, then payment may be made for the extended encounter of care.

3 These Extended Assessment and Management composite APCs may be paid regardless of diagnosis, when the observation care is unrelated to a surgical procedure.

4 The OCE logic will handle the assignment of these composite APCs for payment.

NOTE: A hierarchy of categories has been created that determines which category each code appropriately falls into. This hierarchy is organized from the most clinically specific to the most general type of category. The hierarchy of categories is as follows: guidance services; image processing services; intraoperative services; and imagining supervision and interpretation services. Therefore, while CPT[1] code 93325 may logically be grouped with either image processing services or intraoperative services, it is treated as an image processing service because that group is more clinically specific and precedes intraoperative services in the hierarchy. It was not necessary to include diagnostic radiopharmaceuticals, contrast media or observation categories in this list because those services generally map to only one of those categories.

(3) Composite APCs provide a single payment when more than one of a specified set of major independent services are provided in a single encounter.

(a) Effective for services furnished on or after January 1, 2008, low dose rate prostate brachytherapy and cardiac electrophysiology evaluation and ablation will be paid using composite APCs when the claim contains the specified combination of services. This established an encounter based APC for each of these sets of services that would

[1] CPT only © 2006 American Medical Association (or such other date of publication of CPT). All Rights Reserved.

provide a single payment for certain common combinations of component services that were reported on the same date of service.

1 Composite APC for LDR Prostate Brachytherapy (APC 8001).

a A composite APC 8001, titled "LDR Prostate Brachytherapy Composite," has been created that will provide one bundled payment for LDR prostate brachytherapy when the hospital bills both CPT[2] codes 55875 and 77778 as component services provided during the same hospital encounter.

b CPT[1] code 55875 will continue to be paid through APC 0163 and CPT[1] code 77778 will continue to be paid through APC 0651 when the services are individually furnished other than on the same date of service in the same facility.

c These two CPT[2] codes will be assigned SI **Q** to signify their conditionally package status, and their composite APC assignments.

2 Composite APC for Cardiac Electrophysiologic Evaluation and Ablation (APC 8000).

a Another composite APC (APC 8000 (Cardiac Electrophysiologic Evaluation and Ablation Composite)) was also established in CY 2008 that will pay for a composite service made up of any number of services in groups A and B in Figure 13-2-1 when at least one code from group A and at least one code from group B appear on the same claim with the same date of service. The five CPT[2] codes involved in this composite APC are assigned to SI **Q** to identify their conditionally packaged status.

FIGURE 13-2-1 GROUPS OF CARDIAC ELECTROPHYSIOLOGIC EVALUATION AND ABLATION PROCEDURES ON WHICH THE COMPOSITE APC IS BASED

CODES USED IN COMBINATION: AT LEAST ONE IN GROUP A AND ONE IN GROUP B	HCPCS CODE	CY 2007 APC	CY 2007 SI
GROUP A			
Electrophysiology Evaluation	93619	0085	T
Electrophysiology Evaluation	93620	0085	T
GROUP B			
Ablate Heart Dysrhythm Focus	93650	0086	T
Ablate Heart Dysrhythm Focus	93651	0086	T
Ablate Heart Dysrhythm Focus	93652	0086	T

b The OCE will recognize when the criteria for payment of the composite APC are met and will assign the composite APC instead of the single procedure APCs as currently occurs. The Pricer will make a single payment for the composite APC that will encompass the program payment for the code in Group A and code in Group B, and any other codes reported in Groups A or B, as well as the packaged services furnished on the same date of services.

[2] CPT only © 2006 American Medical Association (or such other date of publication of CPT). All Rights Reserved.

c The composite APC would have a SI of **T** so that payment for other procedures also assigned to SI **T** with lower payment rates would be reduced by 50% when furnished on the same date of service as the composite services.

d Separate payment will continue for other separately paid services that are not reported under the codes in Groups A and B (such as chest x-rays and electrocardiograms).

e Also where a service in Group A is furnished on a date of service that is different from the date of service for a code in Group B for the same beneficiary, payments would be made under the single procedure APCs and the composite APC would not apply.

(b) The TRICARE OCE logic will determine the assignment of the composite APCs for payment.

(c) Figure 13-2-2 provides the circumstances, effective January 1, 2008, under which a single composite APC payment will be made for multiple services that meet the criteria for payment through a composite APC. Where the criteria are not met, payment will occur under the usual associated non-composite APC to which the code is assigned.

FIGURE 13-2-2 COMPOSITE APCS AND CRITERIA FOR COMPOSITE PAYMENT

COMPOSITE APC	COMPOSITE APC TITLE	CRITERIA FOR COMPOSITE PAYMENT
8000	Cardiac Electrophysiologic Evaluation and Ablation Composite	At least one unit of CPT[3] code 93619 or 93620 and at least one unit of CPT[2] code 93650, 93651, or 93652 on the same date of service.
8001	Low Dose Rate Prostate Brachytherapy Composite	One or more units of CPT[3] codes 55875 and 7778 on the same date of service.
8002	Level I Extended Assessment and Management Composite	1) Eight or more units of HCPCS code G0378 are billed— • One the same day as HCPCS code G0379; or • On the same day or the day after CPT[2] codes 99205 or 88215 and; 2) There is no service with SI=**T** on the claim on the same date of service or one day earlier than G0378
8003	Level II Extended Assessment and Management Composite	1) Eight or more units of HCPCS code G0378 are billed on the same date of service or the date of service after CPT[3] 99284, 99285, or 99291 and; 2) There is no service with SI=**T** on the claim on the same date of service or one day earlier than G0378.
0034	Mental Health Services Composite	Payment for any combination of mental health services with the same date of service exceeds the payment for APC 0033.

C. Additional Payments Under The OPPS.

1. Clinical diagnostic testing (labwork).

2. Administration of infused drugs.

[3] CPT only © 2006 American Medical Association (or such other date of publication of CPT). All Rights Reserved.

3. Therapeutic procedures including resuscitation that are furnished during the course of an emergency visit.

4. Certain high-cost drugs, such as the expensive "clotbuster" drugs that must be given within a short period of time following a heart attack or stroke.

5. Cases that fall far outside the normal range of costs. These cases will be eligible for an outlier adjustment.

D. Payment For Patients Who Die In The ED.

1. If the patient dies in the ED, and the patient's status is outpatient, the hospital should bill for payment under the OPPS for the services furnished.

2. If the ED or other physician orders the patient to the operating room for a surgical procedure, and the patient dies in surgery, payment will be made based on the status of the patient.

a. If the patient had been admitted as an inpatient, pay under the hospital DRG-based payment system.

b. If the patient was not admitted as an inpatient, pay under the OPPS (an APC-based payment) for the services that were furnished.

c. If the patient was not admitted as an inpatient and the procedure designated as an inpatient-only procedure (by OPPS payment SI of **C**) is performed, the hospital should bill for payment under the OPPS for the services that were furnished on that date and should include modifier -CA on the line with the HCPCS code for the inpatient procedure. Payment for all services other than the inpatient procedure designated under OPPS by the SI of **C**, furnished on the same date, is bundled into a single payment under APC 0375.

3. Billing and Payment Rules for Using New Modifier -CA. Procedure payable only in the inpatient setting when performed emergently on an outpatient who dies prior to admission.

a. All the following conditions must be met in order to receive payment for services billed with modifier -CA:

(1) The status of the patient is outpatient;

(2) The patient has an emergent, life-threatening condition;

(3) A procedure on the inpatient list (designated by payment SI of **C**) is performed on an emergency basis to resuscitate or stabilize the patient; and

(4) The patient dies without being admitted as an inpatient.

b. If all of the conditions for payment are met, the claim should be submitted using a 013X bill type for all services that were furnished, including the inpatient procedure

(e.g., a procedure designated by OPPS payment SI of **C**). The hospital should include modifier -CA on the line with the HCPCS code for the inpatient procedure.

NOTE: When a line with a procedure code that has a SI of **C** assigned and has a patient status of "20" (deceased) and one of the modifiers is "CA" (patient dies). The OCE software will change the "SI" of the procedure to "S" and price the line using the adjusted APC rate formula.

C. Payment for all services on a claim that have the same date of service as the HCPCS billed with modifier -CA is made under APC 0375. Separate payment is not allowed for other services furnished on the same date.

E. Medical Screening Examinations.

1. Appropriate ED codes will be used for medical screening examinations including ancillary services routinely available to the ED in determining whether or not an emergency condition exists.

2. If no treatment is furnished, medical screening examinations would be billed with a low-level ED code.

F. HCPCS/Revenue Coding Required Under OPPS. Hospital outpatient departments should use the CMS 1450 UB-04 Editor as a guide for reporting HCPCS and revenue codes under the OPPS.

G. Treatment of Partial Hospitalization Services. Effective on May 1, 2009 (implementation of OPPS), hospital-based Partial Hospitalization Programs (PHPs) (psych and Substance Use Disorder Rehabilitation Facilities (SUDRFs)) will be reimbursed a national per diem APC payment under the OPPS. Freestanding PHPs (psych and SUDRFs) will continue to be reimbursed under the existing PHP per diem payment.

1. The National Quality Monitoring Contractor (NQMC) shall include in their authorized provider reports to the contractors additional data elements indicating whether the facility is a freestanding PHP (psych or SUDRF) or a hospital-based PHP (psych). The contractors shall identify hospital-based PHPs (SUDRFs) that are subject to the per diem payment under the OPPS.

2. Services of physicians, clinical psychologists, Clinical Nurse Specialists (CNSs), Nurse Practitioners (NPs), and Physician Assistants (PAs) furnished to partial hospitalization patients will continue to be billed separately as professional services and are not considered to be partial hospitalization services, as long as these providers are not employed by or contracted by the facility.

3. Payment for PHP (psych) services represents the provider's overhead costs, support staff, and the services of Clinical Social Workers (CSWs) and Occupational Therapists (OTs), whose professional services are considered to be included in the PHP per diem rate. For SUDRFs, the costs of alcohol and addiction counselor services would also be included in the per diem.

a. Hospitals will not bill the contractor for the professional services furnished by CSWs, OTs, and alcohol and addiction counselors.

b. Rather, the hospital's costs associated with the services of CSWs, OTs, and alcohol and addiction counselors will continue to be billed to the contractor and paid through the PHP per diem rate.

4. Per diem is the unit of payment since it defines the structure and scheduling of partial hospitalization services. The established per diem represents the median hospital cost of furnishing a day of partial hospitalization. The following are billing instructions for submission of partial hospitalization claims/services:

a. Hospitals are required to use HCPCS codes and report line item dates for their partial hospitalization services. This means that each service (revenue code) provided must be repeated on a separate line item along with the specific date the service was provided for every occurrence. Line item dates of services are reported in Form Locator (FL) 45 "Services Date" (MMDDYY) of the CMS 1450 UB-04.

b. The following is a complete listing of the revenue codes and HCPCS codes that may be billed as partial hospitalization services or other mental health services outside partial hospitalization:

FIGURE 13-2-3 REVENUE AND HCPCS LEVEL I AND II CODES USED IN BILLING FOR PARTIAL HOSPITALIZATION SERVICES AND OTHER MENTAL HEALTH SERVICES OUTSIDE PARTIAL HOSPITALIZATION FOR CY 2008[1]

REVENUE CODE	DESCRIPTION	HCPCS LEVEL I[5] AND II CODES
0250	Pharmacy	HCPCS code not required.
043X	Occupational Therapy	G0129[2]
0900	Behavioral Health Treatment/Services	90801, 90802, 90899
0904	Activity Therapy (Partial Hospitalization)	G0176[3]
0911	Psychiatric General Services	90801, 90802, 90804, 90806, 90808, 90810, 90812, 90814, 90845 - 90853, 90857, 90862, 90865, 90870 - 90880, and 90899

1 **The contractor will edit to assure that HCPCS are present when the above revenue codes are billed and that they are valid HCPCS codes. The contractor will not edit for matching the revenue code to HCPCS.**
2 **The definition of code G0129 is as follows:**
Occupational therapy services requiring skills of a qualified occupational therapist, furnished as a component of a partial hospitalization treatment program, per session (45 minutes or more).
3 **The definition of code G0176 is as follows:**
Activity therapy, such as music, dance, art or play therapies not for recreation, related to care and treatment of patient's disabling mental problems, per session (45 minutes or more).
4 **The definition of code G0177 is as follows:**
Training and educational services related to the care and treatment of patient's disabling mental problems, per session (45 minutes or more).
5 **HCPCS Level I/CPT only © 2006 American Medical Association (or such other date of publication of CPT). All Rights Reserved.**
NOTE: Codes G0129 and G0176, are used only for PHPs. Code G0177 may be used in both PHPs and outpatient mental health setting. Revenue code 250 does not require HCPCS.

FIGURE 13-2-3 REVENUE AND HCPCS LEVEL I AND II CODES USED IN BILLING FOR PARTIAL HOSPITALIZATION SERVICES AND OTHER MENTAL HEALTH SERVICES OUTSIDE PARTIAL HOSPITALIZATION FOR CY 2008[1] (CONTINUED)

REVENUE CODE	DESCRIPTION	HCPCS LEVEL I[5] AND II CODES
0912	Partial Hospitalization Program - Less Intensive (Half-Day PHP)	H0035
0913	Partial Hospitalization Program - Intensive (Full-Day PHP)	H0037
0914	Individual Psychotherapy	90816- 90819, 90821- 90824, 90826-90829, 90845, 90865, or 90880
0915	Group Therapy	90849, 90853, or 90857
0916	Family Psychotherapy	90846, 90847, or 90849
0918	Psychiatric Testing	96101, 96102, 96103, 96116, 96118, 96119, or 96120
0942	Education Training	G0177[4]

1 **The contractor will edit to assure that HCPCS are present when the above revenue codes are billed and that they are valid HCPCS codes. The contractor will not edit for matching the revenue code to HCPCS.**

2 **The definition of code G0129 is as follows:**
Occupational therapy services requiring skills of a qualified occupational therapist, furnished as a component of a partial hospitalization treatment program, per session (45 minutes or more).

3 **The definition of code G0176 is as follows:**
Activity therapy, such as music, dance, art or play therapies not for recreation, related to care and treatment of patient's disabling mental problems, per session (45 minutes or more).

4 **The definition of code G0177 is as follows:**
Training and educational services related to the care and treatment of patient's disabling mental problems, per session (45 minutes or more).

5 **HCPCS Level I/CPT only © 2006 American Medical Association (or such other date of publication of CPT). All Rights Reserved.**

NOTE: Codes G0129 and G0176, are used only for PHPs. Code G0177 may be used in both PHPs and outpatient mental health setting. Revenue code 250 does not require HCPCS.

c. To bill for partial hospitalization services under the hospital OPPS, hospitals are to use the above HCPCS and revenue codes and are to report partial hospitalization services under bill type 013X, along with condition code 41 on the CMS 1450 UB-04 claim form.

d. The claim must include a mental health diagnosis and an authorization on file for each day of service. Since there is no HCPCS code that specifies a partial hospitalization related service, partial hospitalizations are identified by means of a particular bill type and condition code (i.e., 13X TOB with Condition Code 41) along with HCPCS codes specifying the individual services that constitute PHPs. In order to be assigned payment under Partial Hospitalization APC 0033 there must be three or more codes/services off of the PHP List B below of which at least one service is from PHP List A on the same date. List A is a subset of List B and contains only psychotherapy codes, while List B includes al PHP codes.

FIGURE 13-2-4 PHP FOR CY 2008

PHP LIST A – PSYCHOTHERAPY	PHP LIST B – ALL PHP CODES
90818	90801
90819	90802

FIGURE 13-2-4 PHP FOR CY 2008 (CONTINUED)

PHP LIST A – PSYCHOTHERAPY	PHP LIST B – ALL PHP CODES
90821	90816
90822	90817
90826	90818
90827	90819
90828	90821
90829	90822
90845	90823
90846	90824
90847	90826
90849	90827
90853	90828
90857	90820
90865	90845
90880	90846
	90847
	90849
	90853
	90857
	90865
	90880
	90899
	96101
	96102
	96103
	96116
	96118
	96119
	96120
	G0129
	G0176
	G0177

e. In order to assign the partial hospitalization APC to one of the line items (i.e., one of listed services/codes in Figure 13-2-3) the payment APC for one of the line items that represent one of the services that comprise partial hospitalization is assigned the partial hospitalization APC. All other partial hospital services on the same day are packaged; (i.e., the SI is changed from **Q** to **N**.) Partial hospitalization services with SI **E** (items or services that are not covered by TRICARE) or B (more appropriate code required for TRICARE OPPS) are not packaged and are ignored in the PHP processing.

f. Each day of service will be assigned to a partial hospitalization APC, and the partial hospitalization per diem will be paid. Only one PHP APC will be paid per day.

g. Non-mental health services submitted on the same day will be processed and paid separately.

h. Hospitals must report the number of times the service or procedure was rendered, as defined by the HCPCS code.

i. Dates of service per revenue code line for partial hospitalization claims that span two or more dates. Each service (revenue code) provided must be repeated as a separate line item along with the specific date the service was provided for every occurrence. Line item dates of service are reported in "Service Date." Following are examples of reporting line item dates of service. These examples are for group therapy services provided twice during a billing period.

FIGURE 13-2-5 REPORTING OF PARTIAL HOSPITALIZATION SERVICES SPANNING TWO OR MORE DATES - HIPAA 837 FORMAT

RECORD TYPE	REVENUE CODE	HCPCS	DATES OF SERVICE	UNITS	TOTAL CHARGE
61	0915	90849	19980505	1	$80
61	0915	90849	19980529	2	$160

FIGURE 13-2-6 REPORTING OF PARTIAL HOSPITALIZATION SERVICES SPANNING TWO OR MORE DATES - CMS 1450 FORMAT

REVENUE CODE	HCPCS	DATES OF SERVICE	UNITS	TOTAL CHARGES
0915	90849	050598	1	$80
0915	90849	052998	2	$160

Claims will be returned to provider that span two or more dates if a line item date of service is not entered for each HCPCS code reported or if the line item dates of service reported outside of the covered statement period.

5. Reimbursement for a day of outpatient mental health services in a non-PHP program (i.e., those mental health services that are not accompanied with a condition code 41) will be capped at the partial hospital per diem rate. The payments for all of the designated mental health (MH) services will be totalled with the same date of service. If the sum of the payments for the individual MH services, for which there is an authorization on file, exceeds the partial hospitalization per diem, a special MH services composite payment APC (APC 0034) will be assigned to one of the line items that represent MH services. All other MH services will be packaged. The MH services composite payment APC amount is the same as the partial hospital APC per diem rate. MH services with SI **E** or **B** are not included in payments that are totaled and are not assigned the daily mental health composited APC amount.

6. Freestanding psychiatric partial hospitalization services will continue to be reimbursed under all-inclusive per diem rates established under Chapter 7, Section 2.

H. Payment Policy For Observation Services.

1. Observations For Non-Maternity Conditions.

a. Effective for dates of service on or after January 1, 2008, no separate payment will be made for observation services reported with HCPCS code G0378. Instead these hourly observation services will be assigned the SI of **N**, signifying that payment is always packaged.

b. However, in certain circumstances when observation care is provided as an integral part of a patient's extended encounter of care, payment may be made for the entire care encounter through one of two composite APC when certain criteria are met.

(1) APC 8002 (Level I Extended Assessment and Management Composite) describes an encounter for care provided to a patient that includes a high level (Level 5) clinic visit or direct admission to observation in conjunction with observation services of substantial duration (eight or more hours).

(2) APC 8003 (Level II Extended Assessment and Management Composite) describes an encounter for care provided to a patient that includes a high level (Level 4 or 5) emergency department visit or critical care services in conjunction with observation services of substantial duration.

(3) There is no limitation on diagnosis for payment of these composite APCs; however, composite payment will not be made when observation services are reported in association with a surgical procedure (SI of **T**) or the hours of observation care reported are less than eight. Refer to Figure 13-2-7 for specific criteria for composite payment:

FIGURE 13-2-7 CRITERIA FOR PAYMENT OF EXTENDED ASSESSMENT AND MANAGEMENT COMPOSITE APCS

COMPOSITE APC	COMPOSITE APC TITLE	CRITERIA FOR COMPOSITE PAYMENT
8002	Level I Extended Assessment and Management Composite	1) Eight or more units of HCPCS code G0378 are billed— • On the same day as HCPCS code G0379; or • On the same day or the day after CPT codes 99205 or 88215; and 2) There is no service with SI=**T** on the claim on the same date of service or one day earlier than G0378.
8003	Level II Extended Assessment and Management Composite	1) 8 or more units of HCPCS code G0378 are billed on the same date of service or the date of service after CPT codes 99284, 99285, or 99291; and 2) There is no service with SI=T on the claim on the same date of service or one day earlier than G0378.

(4) The beneficiary must also be in the care of a physician during the period of observation, as documented in the medical record by admission, discharge, and other appropriate progress notes that are timed, written, and signed by the physician. The medical record must include documentation that the physician explicitly assessed patient risk to determine that the beneficiary would benefit from observation care.

c. The OCE will evaluate every claim received to determine if payment through a composite APC is appropriate. If payment through a composite APC is inappropriate, the OCE, in conjunction with the TRICARE OPPS Pricer, will determine the appropriate SI, APC, and payment for every code on the claim.

d. Direct Admission to Observation Care Using G0379.

(1) Hospitals should report G0379 when observation services are the result of a direct admission to observation care without an associated emergency room visit, hospital outpatient clinic visit, critical care service, or surgical procedure (**T** SI procedure) on the day of initiation of observation services. Hospitals should only report HCPCS code G0379 when a patient is admitted directly to observation care after being seen by a physician in the community.

(2) Payment for direct admission to observation will be made either:

(a) Separately as low level hospital clinic visit under APC 604

(b) Packaged into payment for composite APC 8002 (Level I Prolonged Assessment and Management Composite), or

(c) Packaged into payment for other separately payable services provided in the same encounter.

(3) Criteria for payment of HCPCS code G0379 under either APC 8002 or APC 0604 include:

(a) Both HCPCS codes G0378 (Hospital observation services, per hour) and G0379 (Direct admission of patient for hospital observation care) are reported with the same date of service.

(b) A service with a SI of **T** or **V** or Critical Care (APC 0617) is not provided on the same date of service as HCPCS code G0379.

(c) If either of the above criteria (i.e., paragraph III.H.1.d.(3)(a) or (b)) is not met, HCPCS code G0379 will be assigned a SI of **N** and will be packaged into payment for other separately payable services provided in the same encounter.

(d) The composite APC will apply, regardless of the patient's particular clinical condition, if the hours of observation services (HCPCS code G0378) are greater or equal to eight and billed on the same date as HCPCS code G0379 and there is not a **T** SI procedure on the same date or day before the date of HCPCS code G0378.

(e) If the composite is not applicable, payment for HCPCS code G0379 may be made under APC 0604. In general, this would occur when the units of observation reported under HCPCS code G0378 are less than eight and no services with a SI of **T** or **V** or Critical Care (APC 0617) were provided on the same day of service as HCPCS code G0379. The final median cost of APC 0604 for CY 2008 is approximately $53.

2. Observations For Maternity Conditions.

a. Maternity observation stays will continue to be paid separately under TRICARE APC T0002 using HCPCS code G0378 (Hospital observation services by hour) if the following criteria are met:

(1) The maternity observation claim must have a maternity diagnosis as Principal Diagnosis (PDX) or Reason Visit Diagnosis (VRDX). Refer to Figure 13-2-8 for listing of maternity diagnoses.

(2) The number of units reported with HCPCS code G0378 must be at a minimum four hours per observation stay; and

(3) No procedure with a SI of **T** can be reported on the same day or day before observation care is provided.

b. If the above criteria are not met, the maternity observation will remain bundled (i.e., the SI for code G0378 will remain **N**).

c. Multiple maternity observations on a claim are paid separately if the required criteria are met for each observation and condition code "G0" is present on the claim or modifier 27 is present on additional lines with G0378.

d. If multiple payable maternity observations are submitted without condition code "G0" or modifier 27, the first encountered is paid and additional observations for the same day are denied.

FIGURE 13-2-8 REQUIRED DIAGNOSES FOR MATERNITY

ICD-9-CM	DESCRIPTION	VALID 5TH DIGIT
Fifth digit subclassification denotes the current episode of care: **0 unspecified as to episode of care or not applicable** **1 delivered, with or without mention of antepartum condition** **2 delivered, with mention of postpartum complication** **3 antepartum condition or complication** **4 postpartum condition or complication**		
V22	Normal pregnancy	
V22.0	Supervision of normal first pregnancy	
V22.1	Supervision of other normal pregnancy	
V22.2	Pregnant state, incidental	
V23	Supervision of high-risk pregnancy	
V23.0	Pregnancy with history of infertility	
V23.1	Pregnancy with history of trophoblastic disease	
V23.2	Pregnancy with history of abortion	
V23.3	Grand multiparity	
V23.4	Pregnancy with other poor obstetric history	
V23.41	Pregnancy with history of pre-term labor	
V23.49	Pregnancy with other poor obstetric history	

FIGURE 13-2-8 REQUIRED DIAGNOSES FOR MATERNITY (CONTINUED)

ICD-9-CM	DESCRIPTION	VALID 5TH DIGIT
Fifth digit subclassification denotes the current episode of care: **0 unspecified as to episode of care or not applicable** **1 delivered, with or without mention of antepartum condition** **2 delivered, with mention of postpartum complication** **3 antepartum condition or complication** **4 postpartum condition or complication**		
V23.5	Pregnancy with other poor reproductive history	
V23.7	Insufficient prenatal care	
V23.81	Elderly primigravida	
V23.82	Elderly multigravida	
V23.83	Young primigravida	
V23.84	Young multigravida	
V23.89	Other high-risk pregnancy	
V23.9	Unspecified high-risk pregnancy	
630	Hydatidiform mole	
631	Other abnormal product of conception	
632	Missed abortion	
633.00	Abdominal pregnancy without intrauterine pregnancy	
633.01	Abdominal pregnancy with intrauterine pregnancy	
633.10	Tubal pregnancy without intrauterine pregnancy	
633.11	Tubal pregnancy with intrauterine pregnancy	
633.20	Ovarian pregnancy without intrauterine pregnancy	
633.21	Ovarian pregnancy with intrauterine pregnancy	
633.80	Other ectopic pregnancy without intrauterine pregnancy	
633.81	Other ectopic pregnancy with intrauterine pregnancy	
633.90	Unspecified ectopic pregnancy without intrauterine pregnancy	
633.91	Unspecified ectopic pregnancy with intrauterine pregnancy	
640.0	Threatened abortion	0, 3
640.8	Other specified hemorrhage in early pregnancy	0, 3
640.9	Unspecified hemorrhage in early pregnancy	0, 3
641.0	Placenta previa without hemorrhage	0, 3
641.1	Hemorrhage from placenta previa	0, 3
641.2	Premature separation of placenta	0, 3
641.3	Antepartum hemorrhage associated with coagulation defects	0, 3
641.8	Other antepartum hemorrhage	0, 3
641.9	Unspecified antepartum hemorrhage	0, 3
642.0	Benign essential hypertension complicating pregnancy, childbirth and the puerperium	0, 3
642.1	Hypertension secondary to renal disease, complicating pregnancy, childbirth and the puerperium	0, 3
642.2	Other pre-existing hypertension complicating pregnancy, childbirth and the puerperium	0, 3

FIGURE 13-2-8 REQUIRED DIAGNOSES FOR MATERNITY (CONTINUED)

ICD-9-CM	DESCRIPTION	VALID 5TH DIGIT
Fifth digit subclassification denotes the current episode of care: **0 unspecified as to episode of care or not applicable** **1 delivered, with or without mention of antepartum condition** **2 delivered, with mention of postpartum complication** **3 antepartum condition or complication** **4 postpartum condition or complication**		
642.3	Transient hypertension of pregnancy	0, 3
642.4	Mild or unspecified pre-eclampsia	0, 3
642.5	Severe pre-eclampsia	0, 3
642.6	Eclampsia	0, 3
642.7	Pre-eclampsia or eclampsia superimposed on pre-existing hypertension	0, 3
642.9	Unspecified hypertension complicating pregnancy, childbirth, or the puerperium	0, 3
643.0	Mild hyperemesis gravidarum	0, 3
643.1	Hyperemesis gravidarum with metabolic disturbance	0, 3
643.2	Late vomiting of pregnancy	0, 3
643.8	Other vomiting complicating pregnancy	0, 3
643.9	Unspecified vomiting of pregnancy	0, 3
644.0	Threatened premature labor	0, 3
644.1	Other threatened labor	0, 3
644.2	Early onset of delivery	0, 3
645.1	Post term pregnancy	0, 3
645.2	Prolonged pregnancy	0, 3
646.0	Papyraceous fetus	0, 3
646.1	Edema or excessive weight gain in pregnancy, without mention of hypertension	0, 3
646.2	Unspecified renal disease in pregnancy, without mention of hypertension	0, 3
646.3	Habitual aborter	0, 3
646.4	Peripheral neuritis in pregnancy	0, 3
646.5	Asymptomatic bacteriuria in pregnancy	0, 3
646.6	Infections of genitourinary tract in pregnancy	0, 3
646.7	Liver disorders in pregnancy	0, 3
646.8	Other specified complications of pregnancy	0, 3
646.9	Unspecified complication of pregnancy	0, 3
647.0	Syphilis	0, 3
647.1	Gonorrhea	0, 3
647.2	Other venereal diseases	0, 3
647.3	Tuberculosis	0, 3
647.4	Malaria	0, 3
647.5	Rubella	0, 3
647.6	Other viral diseases	0, 3
647.8	Other specified infectious and parasitic diseases	0, 3
647.9	Unspecified infection or infestation	0, 3

FIGURE 13-2-8 REQUIRED DIAGNOSES FOR MATERNITY (CONTINUED)

ICD-9-CM	DESCRIPTION	VALID 5TH DIGIT
Fifth digit subclassification denotes the current episode of care: **0 unspecified as to episode of care or not applicable** **1 delivered, with or without mention of antepartum condition** **2 delivered, with mention of postpartum complication** **3 antepartum condition or complication** **4 postpartum condition or complication**		
648.0	Diabetes mellitus	0, 3
648.1	Thyroid dysfunction	0, 3
648.2	Anemia	0, 3
648.3	Drug dependence	0, 3
648.4	Mental disorders	0, 3
648.5	Congenital cardiovascular disorders	0, 3
648.6	Other cardiovascular diseases	0, 3
648.7	Bone and joint disorders of back, pelvis, and lower limbs	0, 3
648.8	Abnormal glucose tolerance	0, 3
648.9	Other current conditions classifiable elsewhere	0, 3
649.0	Tobacco use disorder complicating pregnancy, childbirth, or the puerperium	0, 3
649.1	Obesity complicating pregnancy, childbirth, or the puerperium	0, 3
649.2	Bariatric surgery status complicating pregnancy, childbirth, or the puerperium	0, 3
649.3	Coagulation defects complicating pregnancy, childbirth, or the puerperium	0, 3
649.4	Epilepsy complicating pregnancy, childbirth, or the puerperium	0, 3
649.5	Spotting complicating pregnancy	0, 3
649.6	Uterine size date descrepancy	0, 3
650	Normal delivery	
651.0	Twin pregnancy	0, 3
651.1	Triplet pregnancy	0, 3
651.2	Quadruplet pregnancy	0, 3
651.3	Twin pregnancy with fetal loss and retention of one fetus	0, 3
651.4	Triplet pregnancy with fetal loss and retention of one or more fetus(es)	0, 3
651.5	Quadruplet pregnancy with fetal loss and retention of one or more fetus(es)	0, 3
651.6	Other multiple pregnancy with fetal loss and retention of one or more fetus(es)	0, 3
651.7	Multiple gestation following elective fetal reduction	0, 3
651.8	Other specified multiple gestation	0, 3
651.9	Unspecified multiple gestation	0, 3
655.0	Central nervous system malformation in fetus	0, 3
655.1	Chromosomal abnormality in fetus	0, 3
655.2	Hereditary disease in family possibly affecting fetus	0, 3
655.3	Suspected damage to fetus from viral disease in the mother	0, 3
655.4	Suspected damage to fetus from other disease in the mother	0, 3
655.5	Suspected damage to fetus from drugs	0, 3
655.6	Suspected damage to fetus from radiation	0, 3

FIGURE 13-2-8 REQUIRED DIAGNOSES FOR MATERNITY (CONTINUED)

ICD-9-CM	DESCRIPTION	VALID 5TH DIGIT
Fifth digit subclassification denotes the current episode of care: **0 unspecified as to episode of care or not applicable** **1 delivered, with or without mention of antepartum condition** **2 delivered, with mention of postpartum complication** **3 antepartum condition or complication** **4 postpartum condition or complication**		
655.7	Decreased fetal movements	0, 3
655.8	Other known or suspected fetal abnormality, not elsewhere classified	0, 3
655.9	Unspecified	0, 3
656.0	Fetal-maternal hemorrhage	0, 3
656.1	Rhesus isoimmunization	0, 3
656.2	Isoimmunization from other and unspecified blood-group incompatibility	0, 3
656.3	Fetal distress	0, 3
656.4	Intrauterine death	0, 3
656.5	Poor fetal growth	0, 3
656.6	Excessive fetal growth	0, 3
656.7	Other placental conditions	0, 3
656.8	Other specified fetal and placental problems	0, 3
656.9	Unspecified fetal and placental problem	0, 3
657.0	Polyhydramnios	0, 3
658.0	Oligohydramnios	0, 3
658.1	Premature rupture of membranes	0, 3
658.2	Delayed delivery after spontaneous or unspecified rupture of membranes	0, 3
658.3	Delayed delivery after artificial rupture of membrane	0, 3
658.4	Infection of amniotic cavity	0, 3
658.8	Other	0, 3
658.9	Unspecified	0, 3
664.6	Anal sphincter tear	0
678.0	Fetal hematologic conditions	0, 3
678.1	Fetal conjoined twins	0, 3
679.0	Maternal complications from in utero procedure	0, 3
679.1	Fetal complications from in utero procedure	0, 3

I. Inpatient Only Procedures.

1. The inpatient list on TMA's OPPS web site at http://www.tricare.mil/opps specifies those services that are only paid when provided in an inpatient setting because of the nature of the procedure, the need for at least 24 hours of postoperative recovery time or monitoring before the patient can be safely discharged, or the underlying physical condition of the patient. Denial of payment for procedures on the inpatient only list are appealable under the Appeal of Factual (Non-Medical Necessity) Determinations. Refer to the TRICARE Operations Manual (TOM), Chapter 13, Section 5 for appeal procedures.

2. The following criteria are used when reviewing procedures to determine whether or not they should be moved from the inpatient list and assigned to an APC group for payment under OPPS:

a. Most outpatient departments are equipped to provide the services to the Medicare population.

b. The simplest procedure described by the code may be performed in most outpatient departments.

c. The procedure is related to codes that we have already removed from the inpatient list.

d. It has been determined that the procedure is being performed in multiple hospitals on an outpatient basis.

3. Under the hospital outpatient PPS, payment will not be made for procedures that are designated as "inpatient only". Refer to TMA's Inpatient Procedures web site at http://www.tricare.mil/inpatientprocedures for a list of "inpatient only" procedures.

4. The list will be updated in response to comments as often as quarterly to reflect current advances in medical practice.

5. On rare occasions, a procedure on the inpatient list must be performed to resuscitate or stabilize a patient with an emergent, life-threatening condition whose status is that of an outpatient and the patient dies before being admitted as an inpatient.

a. Hospitals are instructed to submit an outpatient claim for all services furnished, including the procedure code with SI of **C** to which a newly designated modifier (-CA) is attached.

b. Such patients would typically receive services such as those provided during a high-level emergency visit, appropriate diagnostic testing (X-ray, CT scan, EKG, and so forth) and administration of intravenous fluids and medication prior to the surgical procedure.

c. Because these combined services constitute an episode of care, claims will be paid with a procedure code on the inpatient list that is billed with the new modifier under new technology APC 0375 (Ancillary Outpatient Services when Patient expires). Separate payment will not be allowed for other services furnished on the same date.

d. The -CA modifier is not to be used to bill for a procedure with SI of **C** that is performed on an elective basis or scheduled to be performed on a patient whose status is that of an outpatient.

J. APC For Vaginal Hysterectomy.

When billing for vaginal hysterectomies, hospitals shall report the appropriate CPT code.

K. Billing of Condition Codes Under OPPS.

The CMS 1450 UB-04 claim form allows 11 values for condition codes, however, the OCE can only accommodate seven, therefore, OPPS hospitals should list those condition codes that affect outpatient pricing first.

L. Special Billing/Codings Requirements as of January 1, 2008.

1. Payment for Alcohol and/or Substance Abuse Assessment and Intervention Services. Two parallel Level II HCPCS "G" codes (HCPCS codes G0396 and G0397) were created to allow for appropriate reporting and payment of alcohol and substance abuse structured assessment and intervention services that are not provided as screening services, but are performed in the context of the diagnosis or treatment of illness or injury.

a. Contractors shall make payment under the OPPS for HCPCS code G0396 (Alcohol and/or substance (other than tobacco)) abuse structured assessment (e.g., AUDIT, DAST) and brief intervention, 15 to 30 minutes) and HCPCS code G0397 (Alcohol and/or substance (other than tobacco) abuse structured assessment (e.g., AUDIT, DAST), and intervention greater than 30 minutes), only when the service is provided to evaluate patients with signs/symptoms of illness or injury.

b. HCPCS codes G0396 and G0397 are to be used for structured alcohol and/or substance (other than tobacco) abuse assessment and intervention services that are distinct from other clinic and emergency department visit services performed during the same encounter.

2. Payment for Cardiac Rehabilitation Services. Cardiac rehabilitation programs require that programs must be comprehensive and to be comprehensive they must include a medical evaluation, a program to modify cardiac risk factors (e.g., nutritional counseling), prescribed exercise, education and counseling. For CY 2008, hospitals will continue to use CPT[4] code 93797 (Physician services for outpatient cardiac rehabilitation, without continuous ECG monitoring (per session)) and CPT[4] code 93798 (Physician services for outpatient cardiac rehabilitation, with continuous ECG monitoring (per session)) to report cardiac rehabilitation services.

a. However, effective with dates of service January 1, 2008 or later, hospitals may report more than one unit of HCPCS codes 93797 or 93798 for a date of service if more than one cardiac rehabilitation session lasting at least 1 hour each is provided on the same day.

b. In order to report more than one session for a given date of service, each session must be a minimum of 60 minutes. For example, if the services provided on a given day total one hour and 50 minutes, then only one session should be billed to report the cardiac rehabilitation services provided on that day.

[4] CPT only © 2006 American Medical Association (or such other date of publication of CPT). All Rights Reserved.

3. Billing for Wound Care Services.

a. Following CPT[5] codes are classified as "sometimes therapy" services that may be appropriately provided under either a certified therapy plan of care or without a certified therapy plan of care:

(1) 97597 - Active wound care/20 cm or <

(2) 97598 - Active wound care > 20 cm

(3) 97602 - Wound(s) care non-selective

(4) 97605 - Neg press wound tx, < 50 cm

(5) 97606 - Neg pres wound tx, >50cm

b. Hospitals would receive separate payment under the OPPS when they bill for wound care services described by CPT[5] codes 97597, 97598, 97602, 97605, and 97606 that are furnished to hospital outpatients by individuals independent of a therapy plan of care.

c. When these services are performed by a qualified therapist under a certified therapy plan of care, providers should attach an appropriate therapy modifier (that is, **GP** for physical therapy, **GO** for occupational therapy, and **GN** for speech-language pathology) or report their charges under a therapy revenue code (that is, 0420, 0430, or 0440) or both, to receive payment under the professional fee schedule.

d. The OCE logic assigns these services to the appropriate APC for payment under the OPPS if the services are not provided under a certified therapy plan of care or directs contractors to the fee schedule payment rates if the services are identified on hospital claims with therapy modifier or therapy revenue code as a therapy service.

e. Revised the list of therapy revenue codes effective January 1, 2008, that may be reported with CPT[5] codes 97597, 97598, 97602, 97605, and 97606 to designate them as services that are performed by a qualified therapist under a certified therapy plan of care and payable under the professional fee schedule – revenue codes expanded to 042X, 043X, or 044X.

4. Billing for Bone Marrow and Stem Cell Processing Services.

a. Effective January 1, 2008, the three Level II HCPCS codes (G0265, G0266, and G0267) for the special treatment of stem cells prior to transplant will be deleted.

b. Hospital are required to bill the appropriate CPT[5] codes, specifically 38207 through 38215, in order to report bone marrow and stem cell processing services under OPPS.

[5] CPT only © 2006 American Medical Association (or such other date of publication of CPT). All Rights Reserved.

FIGURE 13-2-9 BILLING FOR BONE MARROW AND STEM CELL PROCESSING SERVICES

HCPCS CODE	CPT[6] CODE
G0265	38207
G0266	38208, 38209
G0267	38210, 38211, 38212, 38213, 38214, 38215

c. For CY 2008, CPT[6] codes 38207, 38208, and 38209 for cryopreserving, thawing, and washing bone marrow and stem cells will be assigned to APC 0110, with a median cost of approximately $214 and a SI of **S**. In addition, CPT[6] codes 38210 - 38215, reported for depletion services of bone marrow and stem cells will be assigned APC 0393, which is renamed "Hematologic Processing and Studies," with a median cost of approximately $358 and a SI of **S**.

5. Billing for Implantable Cardioverter Defibrillators (ICDs).

Effective January 1, 2008, the four Level II HCPCS codes (G0297, G0298, G0299, and G0300) for ICD insertion procedures will be deleted. Hospitals are required to bill the appropriate CPT codes, specifically CPT[6] codes 33240 or 33249, as appropriate, along with the applicable device C codes, for payment under the OPPS.

6. Payment for Brachytherapy Sources.

a. The Medicare Improvements for Patients and Providers Act (MIPPA) of 2008, enacted on July 15, 2008, extended the use of the cost-to-charge payment methodology for Brachytherapy through January 1, 2010 with the exception of C2637, which is non-payable.

b. As a result, the SIs for Brachytherapy source HCPCS codes will remain "H," and as such, Brachytherapy will not be eligible for outlier payments or rural Sole Community Hospital (SCH) adjustments up through January 1, 2010.

c. Providers should bill for the number of units of the appropriate source HCPCS **C** code according to the number of brachytherapy sources in the strand (billing for stranded sources). They should not bill as one unit per strand.

d. Following is a list of brachytherapy sources that will continue to be reimbursed under the cost-to-charge payment methodology up through January 1, 2010:

FIGURE 13-2-10 COMPREHENSIVE LIST OF BRACHYTHERAPY SOURCES PAID UNDER COST-TO-CHARGE METHODOLOGY UP THROUGH JANUARY 1, 2010

CPT/ HCPCS	LONG DESCRIPTOR	SI	APC
A9257	Iodine I-125, sodium iodide solution, therapeutic, per millicurie	H	2632
C1716	Brachytherapy source, non-stranded, Gold-198, per source	H	1716
C1717	Brachytherapy source, non-stranded, High Dose Rate Iridium-192, per source	H	1717

[6] CPT only © 2006 American Medical Association (or such other date of publication of CPT). All Rights Reserved.

FIGURE 13-2-10 COMPREHENSIVE LIST OF BRACHYTHERAPY SOURCES PAID UNDER COST-TO-CHARGE METHODOLOGY UP THROUGH JANUARY 1, 2010 (CONTINUED)

CPT/ HCPCS	LONG DESCRIPTOR	SI	APC
C1719	Brachytherapy source, non-stranded, Non-High Dose Rate Iridium-192, per source	H	1719
C2616	Brachytherapy source, non-stranded, Yttrium-90, per source	H	2616
C2634	Brachytherapy source, non-stranded, High Activity, Iodine-125, greater than 1.01 mCi (NIST), per source	H	2634
C2635	Brachytherapy source, non-stranded, High Activity, Palladium- 103, greater than 2.2 mCi (NIST), per source	H	2635
C2636	Brachytherapy linear source, non-stranded, Palladium-103, per 1MM	H	2636
C2637	Brachytherapy source, non-stranded, Ytterbium-169, per source	B	
C2638	Brachytherapy source, stranded, Iodine-125, per source	H	2638
C2639	Brachytherapy source, non-stranded, Iodine-125, per source	H	2639
C2640	Brachytherapy source, stranded, Palladium-103, per source	H	2640
C2641	Brachytherapy source, non-stranded, Palladium-103, per source	H	2641
C2642	Brachytherapy source, stranded, Cesium-131, per source	H	2642
C2643	Brachytherapy source, non-stranded, Cesium-131, per source	H	2643
C2698	Brachytherapy source, stranded, not otherwise specified, per source	H	2698
C2699	Brachytherapy source, non-stranded, not otherwise specified, per source	H	2699

7. Billing for Drugs, Biologicals, and Radiopharmaceuticals.

a. Hospitals should report charges for all drugs, biologicals, and radiopharmaceuticals, regardless of whether the items are paid separately or packaged, using the correct HCPCS codes for the items used.

b. It is also important that the reported units of the service of the reported HCPCS code are consistent with the quantity of a drug, biological, or radiopharmaceutical that was used, as reflected in the longer descriptor of the HCPCS code.

c. If commercially available products are being mixed together to facilitate concurrent administration, the hospital should report the quantity of each product (reported by HCPCS code).

(1) If the hospital is compounding drugs that are not a mixture of commercially available products, but are a different product that has no applicable HCPCS code, then the hospital should report an appropriate unlisted code (J9999 or J3490).

(2) It is not appropriate to bill HCPCS code C9399. HCPCS code C9399, Unclassified drug or biological, is for new drugs and biologicals that are approved by the FDA on or after January 1, 2004, for which a HCPCS code has not been assigned.

d. Following are new HCPCS codes which have been created for reporting drugs, biologicals in the hospital outpatient setting for CY 2008.

FIGURE 13-2-11 NEW HCPCS CODES EFFECTIVE FOR CERTAIN DRUGS, BIOLOGICALS, AND RADIOPHARMACEUTICALS IN CY 2008

2008 HCPCS	2008 SHORT DESCRIPTOR	2008 SI	2008 APC
A9501	Tc99m tebroxmine	N	
A9509	I 123 sodium iodide, dx	N	
A9569	Technetium TC-99m auto WBC	N	
A9570	Indium In-111 auto wbc	N	
A9571	Indium In-111 auto platelet	N	
A9576	Inj prohance multipack	N	
A9577	Inj multihance	N	
A9578	Inj multihance multipack	N	
C9237	Injection, lanreotide acetate	K	9237
C9238	Inj. Levetiracetam	K	9238
C9239	Inj. Temsirolimus	G	1168
C9240	Injection, ixabepilone	K	9240
C9354	Veritas collagen matrix, cm2	G	9354
C9355	Neuromatrix nerve, cuff, cm	G	9355
J0400	Aripiprazole injections	K	1165
J1573	Hepagam B intravenous, inj	K	1138
J2724	Protein C concentrate	K	1139
J92266	Supprelin LA implant	K	1142

e. Changes in HCPCS code descriptors for drugs, biologicals and radiopharmaceuticals effective in CY 2008. Also deletion of several temporary C codes and replacement with new permanent codes. The affected HCPCS codes are listed below:

FIGURE 13-2-12 HCPCS CODE AND DOSAGE DESCRIPTOR CHANGES EFFECTIVE FOR CERTAIN DRUGS, BIOLOGICALS AND RADIOPHARMACEUTICALS IN CY 2008

CY 2007		CY 2008	
HCPCS	DESCRIPTOR	HCPCS	DESCRIPTOR
C9232	Injection, idusulfase, 1mg	J1743	Injection, idusulfase, 1mg
C9233	Injection, ranilbizumab, 0.5 mg	J2778	Injection, ranilbizumab, 0.1 mg
C9234	Injection, agucosidase alfa, 10 mg	J0220	Injection, agucosidase alfa, 10 mg
C9235	Injection, panitumumab, 10 mg	J9303	Injection, panitumumab, 10 mg
C9236	Injection, eculizumab, 10 mg	J1300	Injection, eculizumab, 10 mg
C9350	Microporous collagen tube of nonhuman origin, per centimeter length	C9352	Microporous collagen implantable tube (Neuragen Nerve Guide), per centimeter length
C9350	Microporous collagen tube of nonhuman origin, per centimeter length	C0353	Microporous collagen implantable tube (Neuragen Nerve Protector), per centimeter length

FIGURE 13-2-12 HCPCS CODE AND DOSAGE DESCRIPTOR CHANGES EFFECTIVE FOR CERTAIN DRUGS, BIOLOGICALS AND RADIOPHARMACEUTICALS IN CY 2008 (CONTINUED)

CY 2007		CY 2008	
HCPCS	DESCRIPTOR	HCPCS	DESCRIPTOR
C9351	Acellular dermal tissue matrix of nonhuman origin, per square centimeter (Do not report C9351 in conjunction with J7345)	J7348	Dermal (substitute) tissue of nonhuman origin, with or without other bioengineered or processed elements, without metabolically active elements (tissuemend) per square centimeter
C9351	Acellular dermal tissue matrix of nonhuman origin, per square centimeter (Do not report C9351 in conjunction with J7345)	J7349	Dermal (substitute) tissue of nonhuman origin, with or without other bioengineered or processed elements, without metabolically active elements (primatrix) per square centimeter

f. New HCPCS Drug Codes Separately Payable under OPPS as of January 1, 2008.

FIGURE 13-2-13 NEW DRUG CODES SEPARATELY PAYABLE UNDER OPPS AS OF JANUARY 1, 2008

HCPCS CODE	APC	SI	LONG DESCRIPTOR
C9237	9237	K	Injection, lanreotide acetate, 1 mg
C9240	9240	K	Injection, ixabepilone, 1mg

g. Drugs and biologicals with payment based on Average Sales Price (ASP) effective January 1, 2008. The updated payment rates for drugs and biologicals based on ASPs effective January 1, 2008, can viewed on the TRICARE web site.

h. Correct Reporting of Units for Drugs.

(1) Hospitals should ensure that units of drugs used in the care of patients are accurately reported in terms of the dosage specified in the full HCPCS code descriptor--that is, units should be reported in multiples of the units included in the HCPCS descriptor.

EXAMPLE: 1: If the description for the drug code is 6 mg, and 6 mg of the drug was used in the care of the patient the units billed should be one.

EXAMPLE: 2: If the description for the drug code is 50 mg but 200 mg of the drug was used in the care of the patient, the units billed should be four.

(2) Hospitals should not bill the units based on the way the drug is packaged, stored or stocked. That is, if the HCPCS descriptor for the drug code specifies 1 mg and a 10 mg vial of drug was used, the hospital should bill 10 units, even though only one vial was used.

8. Payment for Therapeutic Radiopharmaceuticals.

a. The MIPPA of 2008, enacted on July 15, 2008, extended the use of the cost-to-charge payment methodology for therapeutic radiopharmaceuticals through January 1, 2010.

b. As a result, the SIs for therapeutic radiopharmaceutical HCPCS codes will remain "H," and as such, therapeutic radiopharmaceuticals will not be eligible for outlier payments or rural SCH adjustments up through January 1, 2010.

c. Following is a list of therapeutic radiopharmaceuticals that will continue to be reimbursed under the cost-to-charge payment methodology up through January 1, 2010:

FIGURE 13-2-14 COMPREHENSIVE LIST OF THERAPEUTIC RADIOPHARMACEUTICALS PAYABLE AS OF JANUARY 1, 2008

CPT/ HCPCS	LONG DESCRIPTOR	SI	APC
A9517	Iodine I-131 sodium iodide capsule(s), therapeutic, per millicurie	H	1064
A9520	Iodine I-131 sodium iodide solution, therapeutic, per millicurie	H	1150
A9543	Yttrium Y-90 ibritumomab tiuxetan, therapeutic, per treatment dose, up to 40 millicuries	H	1643
A9545	Iodine I-131 tositumomab, therapeutic, per treatment dose	H	1645
A9563	Sodium phosphate P-32, therapeutic, per millicurie	H	1675
A0564	Chromic phosphate P-32 suspension, therapeutic, per millicurie	H	1676
A9600	Strontium Sr-89 chloride, therapeutic, per millicurie	H	0701
A9605	Samarium Sm-153 lexidronamm, therapeutic, per 50 millicuries	H	0702

d. Hospitals are required to submit the diagnostic radiopharmaceutical on the same claim as the nuclear medicine procedure along with the date that a particular service was provided.

9. Drug Administration.

a. For CY 2008, hospitals will use the full set of CPT codes for billing drug administration services provided in the hospital outpatient department setting.

b. This includes new CPT codes for CY 2008 listed in Figure 13-2-15.

c. Hospitals are to report all drug administration services, regardless of whether they are separately paid or packaged.

FIGURE 13-2-15 NEW DRUG ADMINISTRATION CPT CODES EFFECTIVE IN CY 2008

CPT CODE[1]	LONG DESCRIPTOR	CY 2008	
		SI	APC
90769	Subcutaneous infusion for therapy or prophylaxis (specify substance or drug); initial, up to 1 hour, including pump set-up and establishment of subcutaneous infusion site(s)	S	0440
90770	Subcutaneous infusion for therapy or prophylaxis (specify substance or drug); each additional hour (List separately in addition to code for primary procedure	S	0437
90771	Subcutaneous infusion for therapy or prophylaxis (specify substance or drug); additional pump set-up with establishment of new subcutaneous infusion site(s) (List separately in addition to code for primary procedure)	S	0438

[1] CPT only © 2006 American Medical Association (or such other date of publication of CPT). All Rights Reserved.

FIGURE 13-2-15 NEW DRUG ADMINISTRATION CPT CODES EFFECTIVE IN CY 2008 (CONTINUED)

CPT CODE[1]	LONG DESCRIPTOR	CY 2008	
		SI	APC
90776	Therapeutic, prophylactic or diagnostic injection (specify substance or drug); each additional sequential push of the same substance/drug provided in a facility (List separately in addition to code for primary procedure.)	N	

[1] CPT only © 2006 American Medical Association (or such other date of publication of CPT). All Rights Reserved.

10. Billing for Cardiac Echocardiography Services.

a. Cardiac Echocardiography Without Contrast. Hospitals are instructed to bill for echocardiograms without contrast in accordance with the CPT code descriptors and guidelines associated with the applicable Level I CPT[7] code(s) (93303-93350).

b. Cardiac Echocardiograph With Contrast.

(1) Hospitals are instructed to bill for echocardiograms with contrast using the applicable HCPCS code(s) included in Figure 13-2-16.

(2) Hospitals should also report the appropriated units for the HCPCS code for the contrast agents used in the performance of the echocardiograms.

FIGURE 13-2-16 HCPCS CODE(S) FOR BILLING ECHOCARDIOGRAMS WITH CONTRAST

HCPCS	LONG DESCRIPTOR
C8921	Transthroacic echocardiography with contrast for congenital cardiac anomalies; complete
C8922	Transthoracic echocardiography with contrast for congenital cardiac anomalies; follow-up or limited study
C8923	Transthoracic echocardiography with contrast, real-time with image documentation (2D) with or without M-mode recording complete
C8924	Transthoracic echocardiography with contrast, real-time with image documentation (2D) with or without M-code recording; follow-up or limited study
C8925	Transesophageal echocardiograph (TEE) with contrast, real time with image documentation (2D) (with or without M-mode recording); including probe placement, image acquisition, interpretation and report
C8926	Transesophageal echocardiograph (TEE) with contrast for congenital cardiac anomalies; including probe placement, image acquisition, interpretation and report
C8927	Transesophageal echocardiograph (TEE) with contrast for monitoring purposes, including probe placement, real time 2-dimensional image acquisition and interpretation leading to ongoing (continuous) assessment of (dynamically changing) cardiac pumping function and to therapeutic measures on an immediate time basis
C8928	Transthoracic echocardiography with contrast, real-time with image documentation (2D), with or without M-mode recording, during rest and cardiovascular stress test using treadmill, bicycle exercise and/or pharmacologically induced stress, with interpretation and report

IV. EFFECTIVE DATE May 1, 2009.

- END -

[7] CPT only © 2006 American Medical Association (or such other date of publication of CPT). All Rights Reserved.

CHAPTER 13
SECTION 3

PROSPECTIVE PAYMENT METHODOLOGY

ISSUE DATE: July 27, 2005
AUTHORITY: 10 U.S.C. 1079(j)(2) and 10 U.S.C. 1079(h)

I. APPLICABILITY

This policy is mandatory for the reimbursement of services provided either by network or non-network providers. However, alternative network reimbursement methodologies are permitted when approved by the TRICARE Management Activity (TMA) and specifically included in the network provider agreement.

II. ISSUE

To describe the payment methodology for hospital outpatient services.

III. POLICY

A. Basic Methodology for Determining Prospective Payment Rates for Outpatient Services.

1. Setting of Payment Rates.

The prospective payment rate for each Ambulatory Payment Classification (APC) is calculated by multiplying the APC's relative weight by the conversion factor.

2. Recalibration of Group Weights and Conversion Factor.

a. Relative Weights for Services Furnished on a Calendar Year (CY) basis.

(1) The most recent Medicare claims and facility cost report data are used in recalibrating the relative APC weights for services furnished on a CY basis.

(2) Weights are derived based on median hospital costs for services in the hospital outpatient APC groups. Billed charges are converted to costs and aggregated to the procedure or visit level. Calculation of the median hospital cost per APC group include the following steps:

(a) The statewide Cost-to-Charge Ratio (CCR) is identified for each hospital's cost center ("statewide CCRs") and applied based on the from date on the claim.

(b) The statewide CCRs are then crosswalked to revenue centers. The CCRs included operating and capital costs but excluded costs associated with direct graduate medical education and allied health education.

(c) A cost is calculated for every billed line item charged on each claim by multiplying each revenue center charge by the appropriate statewide CCR.

(d) Revenue center changes that contain items integral to performing the procedure or visit are used to calculate the per-procedure or per-visit costs. Following is a list of revenue centers whose charges could be packaged into major Healthcare Common Procedure Coding System (HCPCS) codes when appearing in the same claim.

FIGURE 13-3-1 LIST OF REVENUE CENTERS PACKAGED INTO MAJOR HCPCS CODES WHEN APPEARING IN THE SAME CLAIM

REVENUE CODE	DESCRIPTION
0250	Pharmacy, Drugs Requiring Specific Identification, General Class
0251	Generic
0252	Nongeneric
0253	Take Home Drugs
0254	Pharmacy Incident to Other Diagnostic
0255	Pharmacy Incident to Radiology
0257	Nonprescription Drugs
0258	IV Solutions
0259	Other Pharmacy
0260	IV Therapy, General Class
0262	IV Therapy/Pharmacy Services
0263	Supply/Delivery
0264	IV Therapy/Supplies
0269	Other IV Therapy
0270	M&S Supplies
0271	Nonsterile Supplies
0272	Sterile Supplies
0273	Take Home supplies
0275	Pacemaker Drug
0276	Intraocular Lens Source Drug
0277	Oxygen Take Home
0278	Other Implants
0279	Other M&S Supplies
0280	Oncology
0289	Other Oncology
0370	General Classification
0371	Anesthesia Incident to Radiology
0372	Anesthesia Incident to Other Diagnostic Services
0374	Acupuncture

FIGURE 13-3-1 LIST OF REVENUE CENTERS PACKAGED INTO MAJOR HCPCS CODES WHEN APPEARING IN THE SAME CLAIM (CONTINUED)

REVENUE CODE	DESCRIPTION
0379	Other Anesthesia
0390	Blood Storage and Processing
0391	Blood Administration (e.g., transfusions)
0399	Other Blood Storage and Processing
0621	Supplies Incident to Radiology
0622	Supplies Incident to Other Diagnostic
0623	Surgical Dressings
0624	Investigational Device (IDE)
0631	Single Source
0632	Multiple
0633	Restrictive Prescription
0637	Self-Administered Drug (Insulin Admin. in Emergency Diabetic COMA)
0700	Cast Room
0709	Other Cast Room
0710	Recovery Room
0719	Other Recovery Room
0720	Labor Room
0721	Labor
0762	Observation Room
0770	General Classification
0771	Vaccine Administration

1 Some instructions have been issued that require that specific revenue codes be billed with certain HCPCS codes, such as specific revenue codes that must be used when billing for devices that qualify for pass-through payments.

NOTE: If the revenue code is not listed above, refer to the TRICARE Systems Manual (TSM), Chapter 2, Addendum O, for reporting requirements.

2 Where specific instructions have not been issued, contractors should advise hospitals to report charges under the revenue code that would result in the charges being assigned to the same cost center to which the cost of those services were assigned in the cost report.

EXAMPLE: Operating room, treatment room, recovery, observation, medical and surgical supplies, pharmacy, anesthesia, casts and splints, and donor tissue, bone, and organ charges were used in calculating surgical procedure costs. The charges for items such as medical and surgical supplies, drugs and observation were used in estimating medical visit costs.

(e) Costs are standardized for geographic wage variation by dividing the labor-related portion of the operating and capital costs for each billed item by the current hospital Inpatient Prospective Payment System (IPPS) wage index. Sixty percent (60%) is used to represent the estimated portion of costs attributable, on average, to labor.

(f) Standardized labor related cost and the nonlabor-related cost component for each billed item are summed to derive the total standardized cost for each procedure or medical visit.

(g) Each procedure or visit cost is mapped to its assigned APC.

(h) The median cost is calculated for each APC.

(i) Relative payment weights are calculated for each APC, by dividing the median cost of each APC by the median cost for APC 00606 (mid-level clinic visit), Outpatient Prospective Payment System (OPPS) weights are listed on TMA's OPPS web site at http://www.tricare.mil/opps.

(j) These relative payment weights may be further adjusted for budget neutrality based on a comparison of aggregate payments using previous and current CY weights.

b. Conversion Factor Update.

(1) The conversion factor is updated annually by the hospital inpatient market basket percentage increase applicable to hospital discharges.

(2) The conversion factor is also subject to adjustments for wage index budget neutrality, differences in estimated pass-through payments, and outlier payments.

(3) The CY 2007 conversion factor of $61.468. This amount was increased by a market basket update factor of 3.3% for CY 2008, the required wage index and rural budget neutrality adjustment of 1.0019, and an adjustment of 0.12% for the difference in pass-through set aside, resulting in a final standard OPPS conversion factor for CY 2008 of $63.694.

3. Payment Status Indicators (SIs).

A payment SI is provided for every code in the HCPCS to identify how the service or procedure described by the code would be paid under the hospital OPPS; i.e., it indicates if a service represented by a HCPCS code is payable under the OPPS or another payment system, and also which particular OPPS payment policies apply. One, and only one, SI is assigned to each APC and to each HCPCS code. Each HCPCS code that is assigned to an APC has the same SI as the APC to which it is assigned. The following are the payment SIs and descriptions of the particular services each indicator identifies:

a. **A** to indicate services that are paid under some payment method other than OPPS, such as the Durable Medical Equipment, Prosthetics, Orthotics and Supplies (DMEPOS) fee schedule, or CHAMPUS Maximum Allowable Charge (CMAC) reimbursement methodology for physicians.

b. **B** to indicate more appropriate code required for TRICARE OPPS.

c. **C** to indicate inpatient services that are not paid under the OPPS.

d. **E** to indicate items or services are not covered by TRICARE.

e. **F** to indicate acquisition of corneal tissue, which is paid on an allowable charge basis (i.e., paid based on the CMAC reimbursement system or statewide prevailings) and certain Certified Registered Nurse Anesthetist (CRNA) services and hepatitis B vaccines that are paid on an allowable charge basis.

f. **G** to indicate drug/biological pass-through that are paid in separate APCs under the OPPS.

g. **H** to indicate pass-through device categories, brachytherapy sources, and radiopharmaceutical agents allowed on a cost basis.

h. **K** to indicate non-pass-through drugs and biologicals and blood and blood products that are paid in separate APCs under the OPPS.

i. **N** to indicate services that are incidental, with payment packaged into another service or APC group.

j. **P** to indicate services that are paid only in Partial Hospitalization Programs (PHPs).

k. **Q** to indicate packaged services subject to separate payment under OPPS.

NOTE: HCPCS codes with SI **Q** are either separately payable or packaged depending on the specific circumstances of their billing. Outpatient Code Editor (OCE) claims processing logic will be applied to codes assigned SI **Q** in order to determine if the service will be packaged or separately payable.

l. **S** to indicate significant procedures for which payment is allowed under the hospital OPPS, but to which the multiple procedure reduction does not apply.

m. **T** to indicate surgical services for which payment is allowed under the hospital OPPS. Services with this payment indicator are the only services to which the multiple procedure payment reduction applies.

n. **V** to indicate medical visits (including clinic or emergency department (ED) visits) for which payment is allowed under the hospital OPPS.

o. **W** to indicate invalid HCPCS or invalid revenue code with blank HCPCS.

p. **X** to indicate an ancillary service for which payment is allowed under the hospital OPPS.

q. **Z** to indicate valid revenue code with blank HCPCS and no other SI assigned.

NOTE: The system payment logic looks to the SIs attached to the HCPCS codes and APCs for direction in the processing of the claim. A SI, as well as an APC, must be assigned so that payment can be made for the service identified by the new code. The SIs identified for each HCPCS code and each APC listed on TMA's OPPS web site at http://www.tricare.mil/opps.

4. Calculating TRICARE Payment Amount.

a. The national APC payment rate that is calculated for each APC group is the basis for determining the total payment (subject to wage-index adjustment) the hospital will receive from the beneficiary and the TRICARE program. (Refer to TMA's OPPS web site at http://www.tricare.mil/opps for national APC payment rates.)

b. The TRICARE payment amount takes into account the wage index adjustment and beneficiary deductible and cost-share/copayment amounts.

c. The TRICARE payment amount calculated for an APC group applies to all the services that are classified within that APC group.

d. The TRICARE payment amount for a specific service classified within an APC group under the OPPS is calculated as follows:

(1) Apply the appropriate wage index adjustment to the national payment rate that is set annually for each APC group. (Refer to the OPPS Provider File with Wage Indexes on TMA's OPPS home page at http://www.tricare.mil/opps for annual Diagnostic Related Group (DRG) wage indexes used in the payment of hospital outpatient claims, effective January 1 of each year.)

(2) Multiply the wage adjusted APC payment rate by the OPPS rural adjustment (1.071) if the provider is a Sole Community Hospital (SCH) in a rural area.

(3) Determine any outlier amounts and add them to the sum of either paragraph III.A.4.d.(1) or (2).

(4) Subtract from the adjusted APC payment rate the amount of any applicable deductible and/or cost-sharing/copayment amounts based on the eligibility status of the beneficiary at the time the outpatient services were rendered (i.e., those deductibles and cost-sharing/copayment amounts applicable to Prime, Extra and Standard beneficiary categories). Refer to Chapter 2, Addendum A for applicable deductible and/or cost-sharing/copayment amounts for Outpatient Hospital Departments and Ambulatory Surgery Centers (ASCs).

e. Examples of TRICARE payments under OPPS based on eligibility status of beneficiary at the time the services were rendered:

(1) Example #1. Assume that the wage adjusted rate for an APC is $400; the beneficiary receiving the services is an Active Duty Family Member (ADFM) enrolled under Prime, and as such, is not subject to any deductibles or copayments.

(a) Adjusted APC payment rate: $400.

(b) Subtract any applicable deductible:

$400 - $0 = $400

(c) Subtract the Prime ADFM copayment from the adjusted APC payment rate less deductible to calculate the final TRICARE payment amount.

$400 - $0 = $400 TRICARE final payment

(d) TRICARE would pay 100% of the adjusted APC payment rate for ADFMs enrolled in Prime.

(2) Example #2. Assume that the wage adjusted rate for an APC is $400 and the beneficiary receiving the outpatient services is a Prime retiree family member subject to a $12 copayment. Deductibles are not applied under the Prime program.

(a) Adjusted APC payment rate: $400.

(b) Subtract any applicable deductible:

$400 - $0 = $400

(c) Subtract the Prime retiree family member copayment from the adjusted APC payment rate less deductible to calculate the final TRICARE payment amount.

$400 - $12 = $388 TRICARE final payment

(d) In this case, the beneficiary pays zero ($0) deductible and a $12 copayment, and the program pays $388 (i.e., the difference between the adjusted APC payment rate and the Prime retiree family member copayment).

(3) Example #3. This example illustrates a case in which both an outpatient deductible and cost-share are applied. Assume that the wage-adjusted payment rate for an APC is $400 and the beneficiary receiving the outpatient services is a standard ADFM subject to an individual $50 deductible (active duty sponsor is an E3) and 20% cost-share.

(a) Adjusted APC payment rate: $400.

(b) Subtract any applicable deductible:

$400 - $50 = $350

(c) Subtract the standard ADFM cost-share (i.e., 20% of the allowable charge) from the adjusted APC payment rate less deductible to calculate the final TRICARE payment amount.

$350 x .20 = $70 cost-share

$350 - $70 = $280 TRICARE final payment

(d) In this case, the beneficiary pays a deductible of $50 and a $70 cost-share, and the program pays $280, for total payment to the hospital of $400.

5. Adjustments to APC Payment Amounts.

a. Adjustment for Area Wage Differences.

(1) A wage adjustment factor will be used to adjust the portion of the payment rate that is attributable to labor-related costs for relative differences in labor and labor-related costs across geographical regions with the exception of APCs with SIs **K** and **G**. The hospital DRG wage index will be used given the inseparable, subordinate status of the outpatient department within the hospital.

(2) The OPPS will use the same wage index changes as the TRICARE DRG-based payment system, except the effective date for the changes will be January 1 of each year instead of October 1 (refer to the OPPS Provider File with Wage Indexes on TMA's OPPS home page at http://www.tricare.mil/opps.

(3) Sixty percent (60%) of the hospital's outpatient department costs are recognized as labor-related costs that would be standardized for geographic wage differences. This is a reasonable estimate of outpatient costs attributable to labor, as it fell between the hospital DRG operating cost labor factor of 71.1% and the ASC labor factor of 34.45%, and is close to the labor-related costs under the inpatient DRG payment system attributed directly to wages, salaries and employee benefits (61.4%).

(4) Steps in Applying Wage Adjusts under OPPS.

(a) Calculate 60% (the labor-related portion) of the national unadjusted payment rate that represents the portion of costs attributable, on average, to labor.

(b) Determine the wage index in which the hospital is located and identify the wage index level that applies to the specific hospital.

(c) Multiply the applicable wage index determined under (b) and (c) by the amount under (a) that represents the labor-related portion of the national unadjusted payment rate.

(d) Calculate 40% (the nonlabor-related portion) of the national unadjusted payment rate and add that amount to the resulting product in (d). The result is the wage index adjusted payment rate for the relevant wage index area.

(e) If a provider is a SCH in a rural area, or is treated as being in a rural area, multiply the wage adjusted payment rate by 1.071 to calculate the total payment before applying the deductible and copayment/cost-sharing amounts.

(f) Applicable deductible and copayment/cost-sharing amounts would then be subtracted from the wage-adjusted APC payment rate, and the remainder would be the TRICARE payment amount for the services or procedure.

EXAMPLE: A surgical procedure with an APC payment rate of $300 is performed in the outpatient department of a hospital located in Heartland, USA. The cost-sharing amount for the standard ADFM is $60.80 (i.e., 20% of the wage-adjusted APC amount for the procedure). The hospital inpatient DRG wage index value for hospitals located in Heartland, USA, is 1.0234. The labor-related portion of the payment rate is $180 ($300 x 60%), and the nonlabor-related portion of the payment rate is $120 ($300 x 40%). It is assumed that the beneficiary deductible has been met.

NOTE: Units billed x APC x 60% (labor portion) x wage index (hospital specific) + APC x 40% (nonlabor portion) = adjusted payment rate.

1 Wage-Adjusted Payment Rate (rounded to nearest cent):

= ($180 x 1.0234) = $184.21 + $120 = $304.21

2 Cost-share for standard retiree family member (rounded to nearest cent):

= ($304.21 x .20) = $60.84

3 Subtract the standard retiree family member cost-share from the wage-adjusted rate to get the final TRICARE payment:

= ($304.21 - $60.84) = $243.37

b. Discounting of Surgical and Terminating Procedures.

(1) OPPS payment amounts are discounted when more than one procedure is performed during a single operative session or when a surgical procedure is terminated prior to completion. Refer to Chapter 1, Section 16 for additional guidelines on discounting of surgical procedures.

(a) Line items with a SI of **T** are subject to multiple procedure discounting unless modifiers 76, 77, 78, and/or 79 are present.

(b) When more than one procedure with payment SI of **T** is performed during a single operative session, TRICARE will reimburse the full payment and the

beneficiary will pay the cost-share/copayment for the procedure having the highest payment rate.

(c) Fifty percent (50%) of the usual PPS payment amount and beneficiary copayment/cost-share amount would be paid for all other procedures performed during the same operative session to reflect the savings associated with having to prepare the patient only once and the incremental costs associated with anesthesia, operating and recovery room use, and other services required for the second and subsequent procedures.

1 The reduced payment would apply only to the surgical procedure with the lower payment rate.

2 The reduced payment for multiple procedures would apply to both the beneficiary copayment/cost-share and the TRICARE payment.

(2) Hospitals are required to use modifiers on bills to indicate procedures that are terminated before completion.

(a) Fifty percent (50%) of the usual OPPS payment amount and beneficiary copayment/cost-share will be paid for a procedure terminated before anesthesia is induced.

1 Modifier -73 (Discontinued Outpatient Procedure Prior to Anesthesia Administration) would identify a procedure that is terminated after the patient has been prepared for surgery, including sedation when provided, and taken to the room where the procedure is to be performed, but before anesthesia is induced (for example, local, regional block(s), or general anesthesia).

2 Modifier -52 (Reduced Services) would be used to indicate a procedure that did not require anesthesia, but was terminated after the patient had been prepared for the procedure, including sedation when provided, and taken to the room where the procedure is to be performed.

(b) Full payment will be received for a procedure that was started but discontinued after the induction of anesthesia, or after the procedure was started.

1 Modifier -74 (Discontinued Procedure) would be used to indicate that a surgical procedure was started but discontinued after the induction of anesthesia (for example, local, regional block, or general anesthesia), or after the procedure was started (incision made, intubation begun, scope inserted) due to extenuating circumstances or circumstances that threatened the well-being of the patient.

2 This payment would recognize the costs incurred by the hospital to prepare the patient for surgery and the resources expended in the operating room and recovery room of the hospital.

c. Discounting for Bilateral Procedures.

(1) Following are the different categories/classifications of bilateral procedure:

(a) Conditional bilateral (i.e., procedure is considered bilateral if the modifier 50 is present).

(b) Inherent bilateral (i.e., procedure in and of itself is bilateral).

(c) Independent bilateral (i.e., procedure is considered bilateral if the modifier 50 is present, but full payment should be made for each procedure (e.g., certain radiological procedures)).

(2) Terminated bilateral procedures or terminated procedures with units greater than one should not occur, and for type **T** procedures, have the discounting factor set so as to result in the equivalent of a single procedure. Line items with terminated bilateral procedures or terminated procedure with units greater than one are denied.

(3) For non-type **T** procedures there is no multiple procedure discounting and no bilateral procedure discounting with modifier 50 performed. Line items with SI other than **T** are subject to terminated procedure discounting when modifier 52 or 73 is present. Modifier 52 or 73 on a non-type **T** procedure line will result in a 50% discount being applied to that line.

(4) The discounting factor for bilateral procedures is the same as the discounting factor for multiple type **T** procedures.

(5) Inherent bilateral procedures will be treated as a non-bilateral procedure since the bilateralism of the procedure is encompassed in the code.

(6) Following are the different discount formulas that can be applied to a line item:

FIGURE 13-3-2 DISCOUNTING FORMULAS FOR BILATERAL PROCEDURES

DISCOUNTING FORMULA NUMBER	FORMULAS
1	1.0
2	(1.0 + D (U - 1))/U
3	T/U
4	(1 + D)/U
5	D
6	TD/U
7	D (1 + D)/U
8	2.0

Where:

D = discounting fraction (currently 0.5)
U = number of units
T = terminated procedure discount (currently 0.5)

(7) The following figure summarizes the application of above discounting formulas:

FIGURE 13-3-3 APPLICATION OF DISCOUNTING FORMULAS

			DISCOUNTING FORMULA NUMBER			
			TYPE "T" PROCEDURE		NON-TYPE "T" PROCEDURE	
PAYMENT AMOUNT	MODIFIER 52 OR 73	MODIFIER 50	CONDITIONAL OR INDEPENDENT BILATERAL	INHERENT OR NON-BILATERAL	CONDITIONAL OR INDEPENDENT BILATERAL	INHERENT OR NON-BILATERAL
Highest	No	No	2	2	1	1
Highest	Yes	No	3	3	3	3
Highest	No	Yes	4	2	8	1
Highest	Yes	Yes	3	3	3	3
Not Highest	No	No	5	5	1	1
Not Highest	Yes	No	6	6	3	3
Not Highest	No	Yes	7	5	8	1
Not Highest	Yes	Yes	6	6	3	3
For the purpose of determining which APC has the highest payment amount, the terminated procedure discount (**T**) any applicable offset, will be applied prior to selecting the T procedure with the highest payment amount. If both offset and terminated procedure discount apply, the offset will be applied first before the terminated procedure discount. This applies only on claims reimbursed under the OPPS reimbursement methodology.						

NOTE: For the purpose of determining which APC has the highest payment amount, the terminated procedure discount (**T**) will be applied prior to selecting the type **T** procedure with the highest payment amount.

d. Outlier Payments.

An additional payment is provided for outpatient services for which a hospital's charges, adjusted to cost, exceed the sum of the wage adjusted APC rate plus a fixed dollar threshold and a fixed multiple of the wage adjusted APC rate. Only line item services with SIs **P**, **S**, **T**, V, or **X** will be eligible for outlier payment under OPPS. No outlier payments will be calculated for line item services with SIs **G**, **H**, **K**, and **N**, with the exception of blood and blood products.

(1) Outlier payments will be calculated on a service-by-service basis. Calculating outliers on a service-by-service basis was found to be the most appropriate way to calculate outliers for outpatient services. Outliers on a bill basis requires both the aggregation of costs and the aggregation of OPPS payments, thereby introducing some degree of offset among services; that is, the aggregation of low cost services and high cost

services on a bill may result in no outlier payment being made. While service-based outliers are somewhat more complex to administer, under this method, outlier payments will be more appropriately directed to those specific services for which a hospital incurs significantly increased costs.

(2) Outlier payments are intended to ensure beneficiary access to services by having the TRICARE program share the financial loss incurred by a provider associated with individual, extraordinarily expensive cases.

(3) Outlier thresholds are established on a CY basis which requires that a hospital's cost for a service exceed the wage adjusted APC payment rate for that service by a specified multiple of the wage adjusted APC payment rate and the sum of the wage adjusted APC rate plus a fixed dollar threshold in order to receive an additional outlier payment. When the cost of a hospital outpatient service exceeds both of these thresholds a predetermined percentage of the amount by which the cost of furnishing the services exceeds the multiple APC threshold will be paid as an outlier.

(4) Outlier payments are not subject to cost-sharing.

EXAMPLE: Following are the steps involved in determining if services on a claim qualify for outlier payments using the appropriate CY multiple and fixed dollar thresholds.

STEP 1: Identify all APCs on the claim.

STEP 2: Determine the ratio of each wage adjusted APC payment to the total payment of the claim (assume for this example a wage index of 1.0000).

HCPCS CODE	SI	APC	SERVICE	WAGE ADJUSTED APC PAYMENT RATE	RATIO OF APC TO TOTAL PAYMENT
99285	V	0616	Level 5 Emergency Visit	$315.51	0.5107157
70481	S	0283	CT scan with contrast material	$277.48	0.4491566
93041	S	0099	Electrocardiogram	$24.79	0.0401275

STEP 3: Identify billed charges of packaged items that need to be allocated to an APC.

REVENUE CODE	OPPS SERVICE OR SUPPLY	TOTAL CHARGES
0250	Pharmacy	$3,435.50
0270	Medical Supplies	$4,255.80
0350	CT scan	$3,957.00
0450	Emergency Room	$2,986.00
0730	Electrocardiogram	$336.00

STEP 4: Allocate the billed charges of the packaged items identified in Step 3 to their respective wage adjusted APCs based on their percentages to total payment calculated in Step 2.

APC	RATIO ALLOCATION	OPPS SERVICE	250 (PHARMACY)	270 (MEDICAL SUPPLIES)
0616	0.5107157	Level 5 Emergency Visit	$1,754.56	$2,173.50
0283	0.4491566	CT scan with contrast material	$1,543.08	$1,911.52
0099	0.0401275	Electrocardiogram	$137.36	$170.77

STEP 5: Calculate the total charges for each OPPS service (APC) and reduce them to costs by applying the statewide CCR. Statewide CCRs are based on the geographical CBSA (two digit = rural, five digit = urban). Assume that the outpatient CCR is 31.4%.

APC	OPPS SERVICE	TOTAL CHARGES	TOTAL CHARGES REDUCED TO COSTS (CCR = 0.3140)
0616	Level 5 Emergency Visit	$6,914.06	$2,170.01
0283	CT scan with contrast material	$7,411.60	$2,327.24
0099	Electrocardiogram	$644.63	$202.41

STEP 6: Apply the cost test to each wage adjusted APC service or procedure to determine if it qualifies for an outlier payment. If the cost of a service (wage adjusted APC) exceeds both the APC multiplier threshold (1.75 times the wage adjusted APC payment rate) and the fixed dollar threshold (wage adjusted APC rate plus $1,575), multiply the costs in excess of the wage adjusted APC multiplier by 50% to get the additional outlier payment.

APC	WAGE ADJUSTED APC RATE	COSTS	FIXED DOLLAR THRESHOLD (WAGE ADJUSTED APC RATE + $1,575)	MULTIPLIER THRESHOLD (1.75 X WAGE ADJUSTED APC RATE)	COSTS IN EXCESS OF MULTIPLIER THRESHOLD	OUTLIER PAYMENT COSTS OF WAGE ADJUSTED APC - (1.75 X WAGE ADJUSTED APC RATE) X 0.50
0616	$315.51	$2,170.01	$1,890.51	$552.14	$1,618.87	$808.43
0283	$277.48	$2,327.24	$1,852.48	$485.59	$1,841.65	$920.83
0099	$24.79	$202.41	$1,599.79	$43.38	$159.03	-0-*

*** Does not qualify for outlier payment since the APC's costs did not exceed the fixed dollar threshold (APC Rate + $1,575).**

The total outlier payment on the claim was: $1,730.26.

e. Rural SCH payments will be increased by 7.1%. This adjustment will apply to all services and procedures paid under the OPPS (SIs **P**, **S**, **T**, **V**, and **X**), excluding drugs, biologicals and services paid under the pass-through payment policy (SIs **G**, **H**, and **K**).

(1) The adjustment amount will not be reestablished on an annual basis, but may be reviewed in the future, and if appropriate, may be revised.

(2) The adjustment is budget neutral and will be applied before calculating outliers and copayments/cost-sharing.

f. Temporary Transitional Payment Adjustments (TTPAs).

On May 1, 2009 (implementation of TRICARE's OPPS), the TTPAs shall apply to all network and non-network hospitals. For network hospitals, the TTPAs will cover a four year period. The four year transition will set higher payment percentages for the 10 APC codes 604-609 and 613-616 during the first year, with reductions in each of the transition years. For non-network hospitals, the adjustment will cover a three year period, with reductions in each of the transition years for the same 10 APC codes. Figure 13-3-4 provides the TTPA percentage adjustments for the 10 visit APC codes for network and non-network hospitals.

FIGURE 13-3-4 TTPA ADJUSTMENT PERCENTAGES FOR 10 VISIT APC CODES

YEARS	NETWORK		NON-NETWORK	
	ER	HOSPITAL CLINIC	ER	HOSPITAL CLINIC
Year 1	200%	175%	140%	140%
Year 2	175%	150%	125%	125%
Year 3	150%	130%	110%	110%
Year 4	130%	115%	100%	100%
Year 5	100%	100%	100%	100%

g. Temporary Military Contingency Payment Adjustments (TMCPAs).

(1) The Director, TMA or a designee has the authority to adopt, modify, and/or extend temporary adjustments to OPPS payments for TRICARE network hospitals deemed essential for military readiness and support during contingency operations; i.e., based solely on the treatment of active duty personnel and their family members. Under the TMCPAs, TRICARE will reimburse higher payment rates for hospital-based outpatient health care services, if it is determined necessary to ensure adequate Preferred Provider Networks (PPNs). For example, it might be determined that the initial TTPA of 200% of the OPPS rate for emergency room (ER) visits in a particular hospital is not sufficient to ensure network adequacy and as a result, an additional TMCPA of 25%, (i.e., 225% of the OPPS rate

for ER visits) would be necessary to support military contingency operations. The following figure provides an example of how the TTPAs and TMCPAs would be applied:

FIGURE 13-3-5 APPLICATION OF TTPA AND TMCPA ADJUSTMENTS FOR ER VISITS

YEARS	TTPA	TMCPA	TOTAL ADJUSTMENT
Year 1	200%	25%	225%
Year 2	175%	50%	225%
Year 3	150%	75%	225%
Year 4	130%	95%	225%
Year 5	100%	125%	225%

(2) The higher rate will be authorized only if all reasonable efforts have been exhausted in attempting to create an adequate network and that it is cost-effective and appropriate to pay the higher rate to ensure an appropriate mix of primary care and specialists in the network. Appropriate evidence for determining that higher rates are necessary may include consideration of the number of available primary care and specialist providers in the network locality, availability (including reassignment) of military providers in the location or nearby, the appropriate mix of primary care and specialists needed to satisfy demand and meet appropriate patient access standards (appointment/waiting time, travel distance, etc.), the efforts that have been made to create an adequate network, other cost-effective alternatives and other relevant factors. If it is determined that the availability of an adequate number and mix of qualified health care providers in a network is not found, the Director TRICARE Regional Office (DTRO) shall conduct a thorough analysis and forward recommendations with a cost estimate for approval to the Director, TMA or designee through the TMA Contracting Officer (CO) for coordination. Coordination of the request for TMCPAs shall be submitted to the TMA Chief, Medical Benefits and Reimbursement Branch (MB&RB).

(3) TMCPAs may also be extended to non-network hospitals on a case-by-case basis for specific procedures where it is determined that the procedures cannot be obtained timely enough from a network hospital.

(4) The procedures for submitting a request for a TMCPA are as follows:

(a) Who can apply:

1 DTRO

2 Providers through the DTRO

3 Managed Care Support Contractor (MCSC) through the DTRO

4 Military Treatment Facility (MTF) through the DTRO

(b) How to apply:

1 Applicant must submit a written request to the DTRO.

2 Justification for the TMCPA must include the information outlined in paragraph III.A.5.g.

3 The DTRO shall conduct a thorough analysis and forward recommendations with a cost estimate for approval to the Director, TMA or designee through the TMA CO for coordination.

4 Disapprovals by the DTRO will not be forwarded to the Director, TMA or designee.

5 The Director, TMA or designee is the final approval authority.

6 A decision by the Director, TMA or designee to adopt, modify, or extend TMCPAs is not subject to appeal.

7 The DTRO shall conduct an analysis to ensure the total payment adjustment (TTPA + TMCPA) must be lesser than the billed charge.

8 The effective date of TMCPAs shall be on a quarterly basis to coincide with the OPPS quarterly updates.

9 TMCPAs will generally be granted for up to three years, after which time hospitals may reapply for subsequent three-year periods based on current utilization and access data. In the event the hospital continues to meet criteria, the TMCPAs shall continue.

10 Signed letters of intent must be submitted prior to approval of TMCPAs.

h. TTPAs and TMCPAs shall not be included in cost outlier calculations.

i. The TTPAs are wage adjusted through the OPPS Pricer. The TMCPAs are not wage adjusted as the adjustment is handled outside the OPPS Pricer.

j. The TTPAs and TMCPAs are not subject to cost-sharing.

B. Transitional Pass-Through for Innovative Medical Devices, Drugs, and Biologicals.

1. Items Subject to Transitional Pass-Through Payments.

a. Current Orphan Drugs.

A drug or biological that is used for a rare disease or condition with respect to which the drug or biological has been designated under section 526 of the Federal Food, Drug, and Cosmetic Act if payment for the drug or biological as an outpatient hospital service was being made on the first date that the OPPS was implemented.

NOTE: Orphan drugs will be paid separately at the Average Sales Price (ASP) + 6%, which represents a combined payment for acquisition and overhead costs associated

with furnishing these products. Orphan drugs will no longer be paid based on the use of drugs because all orphan drugs, both single-indication and multi-indication, will be paid under the same methodology. The TRICARE contractors will not be required to calculate orphan drug payments.

b. Current Cancer Therapy Drugs, Biologicals and Brachytherapy.

These items are drugs or biologicals that are used in cancer therapy, including (but not limited to) chemotherapeutic agents, antiemetics, hematopoietic growth factors, colony stimulating factors, biological response modifiers, biphosphonates, and a device of brachytherapy if payment for the drug or biological as an outpatient hospital service was being made on the first date that the OPPS was implemented.

c. Current Radiopharmaceutical Drugs and Biological Products.

A radiopharmaceutical drug or biological product used in diagnostic, monitoring, and therapeutic nuclear medicine procedures if payment for the drug or biological as an outpatient hospital service was being made on the first date that the OPPS was implemented.

d. New Medical Devices, Drugs, and Biologicals.

New medical devices, drugs, and biologic agents, will be subject to transitional pass-through payment in instances where the item was not being paid for as a hospital outpatient service as of December 31, 1996, and where the cost of the item is "not insignificant" in relation to the hospital OPPS payment amount.

2. Items eligible for transitional pass-through payments are generally coded under a Level II HCPCS code with an alpha prefix of "C".

a. Pass-through device categories are identified by SI **H**.

b. Pass-through drugs and biological agents are identified by SI **G**.

3. Payment of Pass-Through Drugs and Biologicals.

a. Pass-through drugs and biologicals, will be paid a rate equivalent to what would be received in a physician's office setting (ASP plus 6%) (i.e., the ASP methodology established under the Medicare physician fee schedule) or the rate under section 1847B of the Social Security Act (Competitive Acquisition Program (CAP)) if the drug or biological is covered under CAP and has subsequently been granted pass-through status as part of the Centers of Medicare and Medicaid Services (CMS) application process. Following is the applicable payment methodology for transitional pass-through drugs or biologicals.

b. Otherwise, the drugs and biologicals will be paid at ASP plus 5% for CY 2008.

c. New radiopharmaceuticals with pass-through will be paid based on the Wholesale Acquisition Cost (WAC) or, if WAS is not available, based on 95% of the product's most recent Average Wholesale Price (AWP).

d. Beneficiary copayments/cost-sharing will be based on the entire ASP of the transition pass-through drug or biological.

e. The drugs and biologicals that are continuing pass-through status or have been granted pass-through status as of January 2008 for CY 2008 are included in Figure 13-3-6.

FIGURE 13-3-6 DRUGS AND BIOLOGICALS WITH PASS-THROUGH STATUS IN CY 2008

HCPCS	DESCRIPTOR	SI	APC
C9239	Inj, temsirolimus	G	1168
C9352	Neuragen nerve guide, per cm	G	9350
C9353	Neurawrap nerve protestor, cm	G	1169
J0129	Abatacept injection	G	9230
J0348	Anadulafungin injection	G	0760
J0894*	Decitabine injection	G	9231
J1300	Eculizumab injection	G	9236
J1740	Ibandronate sodium injection	G	9229
J1743	Idursulfase injection	G	9232
J2248	Micafungin sodium injection	G	9227
J2323	Natalizumab injection	G	9126
J2778	Ranibizumab injection	G	9233
J3243	Tigecycline injection	G	9228
J3473	Hyaluronidase recombinant	G	0806
J3488	Reclast injection	G	0951
J7348	Tissuemend tissue	G	9351
JJ7349	Primatrix tissue	G	1141
J9261	Nelarabine injection	G	0825
J9303	Panitumumab injection	G	9235

*** Indicates that the drug was paid at a rate determined by the Part B drug CAP methodology while identified as pass-through under the OPPS.**

4. Transitional Pass-Through Device Categories.

a. Excluded Medical Devices.

Equipment, instruments, apparatuses, implements or items that are generally used for diagnostic or therapeutic purposes that are not implanted or incorporated into a body part, and that are used on more than one patient (that is, are reusable), are excluded from pass-through payment. This material is generally considered to be a part of hospital overhead costs reflected in the APC payments.

b. Included Medical Devices.

(1) The following implantable items may be considered for the transitional pass-through payments:

(a) Prosthetic implants (other than dental) that replace all or part of an internal body organ.

(b) Implantable items used in performing diagnostic x-rays, diagnostic laboratory tests, and other diagnostic tests.

NOTE: Any Durable Medical Equipment (DME), orthotics, and prosthetic devices for which transitional pass-through payment does not apply will be paid under the DMEPOS fee schedule when the hospital is acting as the supplier (paid outside the PPS).

c. Pass-Through Payment Criteria for Devices.

Pass-through payments will be made for new or innovative medical devices that meet the following requirements:

(1) They were not recognized for payment as a hospital outpatient service prior to 1997 (i.e., payment was not being made as of December 31, 1996). However, the medical device shall be treated as meeting the time constraint (i.e., payment was not being made for the device as of December 31, 1996) if either:

(a) The device is described by one of the initial categories established and in effect, or

(b) The device is described by one of the additional categories established and in effect, and

1 An application under the Federal Food, Drug, and Cosmetic Act has been approved; or

2 The device has been cleared for market under section 510(k) of the Federal Food, Drug, and Cosmetic Act; or

3 The device is exempt from the requirements of section 510(k) of the Federal Food, Drug, and Cosmetic Act under section 510(l) or section 510(m) of the Act.

(2) They have been approved/cleared for use by the Food and Drug Administration (FDA).

(3) They are determined to be reasonable and necessary for the diagnosis or treatment of an illness or injury or to improve the functioning of a malformed body part.

(4) They are an integral and subordinate part of the procedure performed, are used for one patient only, are surgically implanted or inserted via a natural or surgically

created orifice on incision, and remain with that patient after the patient is released from the hospital outpatient department.

(a) Reprocessed single-use devices that are otherwise eligible for pass-through payment will be considered for payment if they meet FDA's most recent regulatory criteria on single-use devices.

(b) It is expected that hospital charges on claims submitted for pass-through payment for reprocessed single-use devices will reflect the lower cost of these devices.

NOTE: The FDA published guidance for the processing of single-use devices on August 14, 2000 - "Enforcement Priorities for Single-Use Devices Reprocessed by Third Parties and Hospitals".

(5) They are not equipment, instruments, apparatuses, implements, or such items for which depreciation and financing expenses are recovered as depreciable assets.

(6) They are not materials and supplies such as sutures, clips, or customized surgical kits furnished incidental to a service or procedure.

(7) They are not material such as biologicals or synthetics that may be used to replace human skin.

(8) No existing or previously existing device category is appropriate for the device.

(9) The associated cost is not insignificant in relation to the APC payment for the service in which the innovative medical equipment is packaged.

(10) The new device category must demonstrate that utilization of its devices provide substantial clinical improvement for beneficiaries compared with currently available treatments, including procedures utilizing devices in existing or previously existing device categories.

d. Duration of Transitional Pass-Through Payments.

(1) The duration of transitional pass-through payments for devices is for at least two, but not more than three years. This period begins with the first date on which a transitional pass-through payment is made for any medical device that is described by the category.

(2) The costs of devices no longer eligible for pass-through payments will be packaged into the costs of the procedures with which they are normally billed.

e. General Coding and Billing Instructions and Explanations.

(1) Devices Implanted, Removed, and Implanted Again, Not Associated With Failure (Applies to Transitional Pass-Through Devices Only):

(a) In instances where the physician is required to implant another device because the first device fractured, the hospitals may bill for both devices - the device that resulted in fracture and the one that was implanted into the patient.

(b) It is realized that there may be instances where an implant is tried but later removed due to the device's inability to achieve the necessary surgical result or due to inappropriate size selection of the device by the physician (e.g., physician implants an anchor to bone and the anchor breaks because the bone is too hard or must be replaced with a larger anchor to achieve a desirable result). In such instances, separate reimbursement will be provided for both devices. This situation does not extend to devices that result in failure or are found to be defective. For failed or defective devices, hospitals are advised to contact the vendor/manufacturer.

NOTE: This applies to transitional pass-through devices only and not to devices packaged into an APC.

(2) Kits. Manufacturers frequently package a number of individual items used in a particular procedure in a kit. Generally, to avoid complicating the category list unnecessarily and to avoid the possibility of double coding, codes for such kits have not been established. However, hospitals are free to purchase and use such kits. If the kits contain individual items that separately qualify for transitional pass-through payment, these items may be separately billed using applicable codes. Hospitals may not bill for transitional pass-through payments for supplies that may be contained in kits.

(3) Multiple Units. Hospitals must bill for multiple units of items that qualify for transitional pass-through payments, when such items are used with a single procedure, by entering the number of units used on the bill.

(4) Reprocessed Devices. Hospitals may bill for transitional pass-through payments only for those devices that are "single use." Reprocessed devices may be considered "single use" if they are reprocessed in compliance with the enforcement guidance of the FDA relating to the reprocessing of devices applicable at the time the service is delivered.

f. Current Device Categories Subject to Pass-Through Payment. Two device categories were established for pass-through payment as a January 1, 2007, HCPCS code C1821 (interspinous process distraction device (implantable)) and HCPCS code L8690 (auditory osseointegrated device, includes all internal and external components), will be active categories for pass-through payment for two years as of January 1, 2007, i.e., these categories will expire from pass-through payment as of December 31, 2008.

g. Reduction of Transitional Pass-Through Payments to Offset Costs Packaged into APC Groups.

(1) Each new device category will be reviewed on a case-by-case basis to determine whether device costs associated with the new category were packaged into the existing APC structure.

(2) If it is determined that, for any new device category, no device costs associated with the new category were packaged into existing APCs, the offset amount for the new category would be set to $0 for CY 2008.

h. Calculation of Transitional Pass-Through Payment for a Pass-Through Device.

(1) Device pass-through payment is calculated by applying the statewide CCR to the hospital's charges on the claim and subtracting any appropriate pass-through offset. Statewide CCRs are based on the geographical CBSA (two digit = rural, five digit = urban).

(2) The following are two examples of the device pass-through calculations, one incorporating a device offset amount applicable to CY 2003 and the other only applying the CCR (offsets set to $0 for CY 2005).

(3) The offset adjustment is applied only when a pass-through device is billed in addition to the APC[1].

Example #1 Transitional Pass-Through Payment Calculation with Offset:

Device: (C1884 - Embolization Protective System)

Device cost = Hospital charge converted to cost = $1,200.00

Associated procedure: HCPCS Level I[1] code 92982 (APC0083)

Payment rate = $3,289.42

Coinsurance amount = $657.88 (standard ADFM who has met his/her yearly deductible)

Total offset amount to be applied for each APC that contains device costs = $802.06

NOTE: The total offset from the device amount is wage-index adjusted and the multiple procedure discount factor is adjusted before it is subtracted from the device cost. (Refer to paragraph III.B.4.h.(4) for detailed application of discounting factors to offset amounts.) This example assumes a wage index of 1.0000.

Device cost adjusted by total offset amount:

$1,200 - $802.06 = $397.94

[1] CPT only © 2006 American Medical Association (or such other date of publication of CPT). All Rights Reserved.

TRICARE program payment (before wage index adjustment) for APC 0083:

$3,289.42 - $657.88 = $2,631.54

TRICARE payment for pass-through device C1884 = $397.94

Beneficiary cost-share liability for APC 0083 = $657.88

Total amount received by provider for APC 0083 and pass-through device C1884:

$2,631.54	TRICARE program payment for HCPCS Level I[2] code 92982 when used with device code C1884
657.88	Beneficiary coinsurance amount for HCPCS Level I[2] code 92982
397.94	Transitional pass-through payment for device
$3,687.36	Total amount received by the provider

Example #2 Transitional Pass-Through Payment Calculation without Offset

Device: (C1884 - Embolization Protective System)

Device cost = Hospital charge converted to cost = $1,500.00

Associated procedure: HCPCS Level I[2] code 92982 (APC0083)

Payment rate = $3,289.42

Coinsurance amount = $657.88 (standard ADFM who has met his/her yearly deductible)

Total offset amount to be applied for each APC that contains device costs = $0.

NOTE: The total offset from the device amount is wage-index adjusted and the multiple procedure discount factor is adjusted before it is subtracted from the device cost. (Refer to paragraph III.B.4.h.(4) for detailed application of discounting factors to offset amounts.) This example assumes a wage index of 1.0000.

Device cost adjusted by total offset amount:

$1,500 - $0 = $1,500

TRICARE program payment (before wage index adjustment) for APC 0083:

$3,289.42 - $657.88 = $2,631.54

TRICARE payment for pass-through device C1884 = $1,500

Beneficiary cost-share liability for APC 0083 = $657.88

[2] CPT only © 2006 American Medical Association (or such other date of publication of CPT). All Rights Reserved.

Total amount received by provider for APC 0083 and pass-through device C1884:

$2,631.54	TRICARE program payment for HCPCS Level I[3] code 92982 when used with device code C1884
657.88	Beneficiary coinsurance amount for HCPCS Level I[3] code 92982
1,500.00	Transitional pass-through payment for device
$4,789.42	Total amount received by the provider

NOTE: Transitional payments for devices (SI=H) are not subject to beneficiary cost-sharing/copayments.

(4) Steps involved in applying multiple discounting factors to offset amounts prior to subtracting from the device cost.

STEP 1: For each APC with an offset multiply the offset by the discount percent (whether it is 50%, 75%, 100% or 200%) and the units of service.

(Offset x Discount Rate x Units of Service)

STEP 2: Sum the products of Step 1.

STEP 3: Wage adjust the sum of the products calculated in Step 2.

(Step 2 Amount x Labor % x Wage Index) + Step 2 Amount x Nonlabor %)

STEP 4: If the units of service from the procedures with offsets are greater than the device units of service, then Step 3 is adjusted by device units divided by procedure offset units.

[(Step 2 Amount x Labor % x Wage Index) + (Step 2 Amount x Nonlabor %) x (Device Units ÷ Offset Procedure Units)]

otherwise

(Step 2 Amount x Labor % x Wage Index) Step 2 Amount x Non-Labor %)

[3] CPT only © 2006 American Medical Association (or such other date of publication of CPT). All Rights Reserved.

EXAMPLE: If there are two procedures with offsets but only one device, then the final offset is reduced by 50%.

STEP 5: If there is only one line item with a device, then the amount calculated in Step 4 is subtracted from the line item charge adjusted to cost.

[Step 4 Amount - (Line Item Charge x State CCR)]

If there are multiple devices, then the amount from Step 4 is allocated to the line items with devices based on their charges.

(Line Item Device Charge ÷ Sum of Device Charges)

C. Drugs, Biologicals, and Radiopharmaceuticals Without Pass-Through Status.

1. Radiopharmaceuticals, drugs, and biologicals which do not have pass-through status, are paid in one of three ways:

a. Packaged payment, or

b. Separate payment (individual APCs), or

c. Allowable charge.

2. The cost of drugs and radiopharmaceuticals are generally packaged into the APC payment rate for the procedure or treatment with which the products are usually furnished:

a. Hospitals do not receive separate payment for packaged items and supplies; and

b. Hospitals may not bill beneficiaries separately for any such packaged items and supplies whose costs are recognized and paid for within the national OPPS payment rate for the associated procedure or services.

3. Although diagnostic and therapeutic radiopharmaceutical agents are not classified as drugs or biologicals, separate payment has been established for them under the same packaging threshold policy that is applied to drugs and biologicals; i.e., the same adjustments will be applied to the median costs for radiopharmaceuticals that will apply to non-pass-through, separately paid drugs and biologicals.

D. Criteria for Packaging Payment for Drugs, Biologicals and Radiopharmaceuticals.

1. Generally, the cost of drugs and radiopharmaceuticals are packaged into the APC payment rate for the procedure or treatment with which the products are usually furnished. However, packaging for certain drugs and radiopharmaceuticals, especially those that are particularly expensive or rarely used, might result in insufficient payments to hospitals, which could adversely affect beneficiary access to medically necessary services.

2. Payments for drugs and radiopharmaceuticals are packaged into the APCs with which they are billed if the median cost per day for the drug or radiopharmaceutical is less than $60. Separate APC payment is established for drugs and radiopharmaceuticals for which the median cost per day exceeds $60.

3. An exception to the packaging rule is being made for injectable oral forms of antiemetics, listed in Figure 13-3-7.

FIGURE 13-3-7 ANTIEMETICS EXEMPTED FROM CY 2008 $60 PACKAGING THRESHOLD

HCPCS CODE	SHORT DESCRIPTOR
J1260	Dolasetron mesylate
J1626	Granisetron HCl Injection
J2405	Ondansetron HCl Injection
J2469	Palonosetron HCl
Q0166	Granisetron HCl 1 mg oral
Q0179	Ondansetron HCl 8 mg oral
Q0180	Dolasetron Mesylate oral

4. Payment for Drugs, Biologicals, and Radiopharmaceuticals Without Pass-Through Status That Are Not Packaged.

a. "Specified Covered Outpatient Drugs" Classification.

(1) Special classification (i.e., "specified covered outpatient drug") is required for certain separately payable radiopharmaceutical agents and drugs or biologicals for which there are specifically mandated payments.

(2) A "specified covered outpatient drug" is a covered outpatient drug for which a separate APC exists and that is either a radiopharmaceutical agent or drug or biological for which payment was made on a pass-through basis on or before December 31, 2002.

(3) The following drugs and biologicals are designated exceptions to the "specified covered outpatient drugs" definition (i.e., not included within the designated category classification):

(a) A drug or biological for which payment was first made on or after January 1, 2003, under the transitional pass-through payment provision.

(b) A drug or biological for which a temporary HCPC code has been assigned.

(c) Orphan drugs.

b. Payment of Specified Outpatient Drugs, Biological, and Radiopharmaceuticals.

(1) Specified outpatient drugs and biologicals will be paid a combined rate of the ASP plus 5% which is reflective of the present hospital acquisition and overhead costs for separately payable drugs and biologicals under the OPPS. In the absence of ASP data, the WAC will be used for the product to establish the initial payment rate. If the WAC is also unavailable, then payment will be calculated at 95% of the most recent AWP.

(2) Since there is no ASP data for separately payable specified radiopharmaceuticals, reimbursement will be based on charges converted to costs. Refer to Section 2, Figure 13-2-13, for a list of therapeutic radiopharmaceuticals that will continue to be reimbursed under the cost-to-charge methodology up through January 1, 2010.

(a) Therapeutic radiopharmaceuticals must have a mean per day cost of more than $60 in order to be paid separately.

(b) Diagnostic radiopharmaceuticals and contrast agents are packaged regardless of per day cost since they are ancillary and supportive of the therapeutic procedures in which they are used.

c. Designated SI.

The HCPCS codes for the above three categories of "specified covered outpatient drugs" are designated with the SI **K** - non-pass-through drugs, biologicals, and radiopharmaceuticals paid under the hospital OPPS (APC Rate). Refer to TMA's OPPS web site at http://www.tricare.mil/opps for APC payment amounts of separately payable drugs, biologicals and radiopharmaceuticals.

5. Payment for Non-Pass-Through Drugs, Biologicals, and Radiopharmaceuticals With HCPCS Codes, But Without OPPS Hospital Claims Data.

a. These new drugs and biologicals with HCPCS codes as of January 1, 2008, but which do not have pass-through status and are without OPPS hospital claims data, will be paid at ASP plus 5% consistent with its final payment methodology for other separately payable non-pass-through drugs and biologicals.

b. Payment for all new non-pass-through diagnostic radiopharmaceuticals will be packaged.

c. In the absence of ASP data, the WAC will be used for the product to establish the initial payment rate for new non-pass-through drugs and biologicals with HCPCS codes, but which are without OPPS claims data. If the WAC is also unavailable, payment will be made at 95% of the product's most recent AWP.

d. SI **K** will be assigned to HCPCS codes for new drugs and biologicals for which pass-through application has not been received.

e. Payment for new therapeutic radiopharmaceuticals with HCPCS codes as of January 1, 2008, but which do not have pass-through status, will be assigned SI **H** and continue to be reimbursed under the cost-to-charge methodology up through January 1, 2010.

f. In order to determine the packaging status of these items for CY 2008 an estimate of the per day cost of each of these items was calculated by multiplying the payment rate for each product based on ASP plus 5%, by a estimated average number of units of each product that would typically be furnished to a patient during one administration in the hospital outpatient setting. Items for which the estimated per day cost is less than or equal to $60 will be packaged.

6. Drugs and Biologicals Not Eligible for Pass-Through Status and Receiving Separate Nonpass-Through Payment.

a. Payment will be based on median costs derived from CY claims data for drugs and biologicals that have been:

(1) Separately paid since implementation of the OPPS under Medicare, but were not eligible for pass-through status; and

(2) Historically packaged with the procedures with which they were billed, even though their median cost per day was above the $60 packaging threshold.

b. Payment based on median costs should be adequate for hospitals since these products are generally older or low-cost items.

7. Payment for New Drugs, Biologicals and Radiopharmaceuticals Before HCPCS Codes Are Assigned.

a. The following payment methodology will enable hospitals to begin billing for drugs and biologicals that are newly approved by the FDA and for which a HCPCS code has not yet been assigned by the National HCPCS Alpha-Numeric Workgroup that could qualify them for pass-through payment under the OPPS:

(1) Hospitals should be instructed to bill for a drug or biological that is newly approved by the FDA by reporting the National Drug Code (NDC) for the product along with a new HCPCS code C9399, "Unclassified Drug or Biological."

(2) When HCPCS code C9399 appears on the claim, the OCE suspends the claim for manual pricing by the contractor.

(3) The new drug, biological and/or radiopharmaceutical will be priced at 95% of its AWP using Red Book or an equivalent recognized compendium, and process the claim for payment.

(4) The above approach enables hospitals to bill and receive payment for a new drug, biological or radiopharmaceutical concurrent with it's approval by the FDA.

b. Hospitals will discontinue billing C9399 and the NDC upon implementation of a HCPCS code, SI, and appropriate payment amount with the next quarterly OPPS update.

E. Drug Administration Coding and Payment.

1. The following HCPCS Level I drug administration codes will be assigned to their respective APCs for payment:

FIGURE 13-3-8 CROSSWALK FROM HCPCS LEVEL I[1] CODES FOR DRUG ADMINISTRATION TO DRUG ADMINISTRATION APCS

HCPCS LEVEL I[1] CODE	DESCRIPTION	SI	APC
90769	Subcutaneous infusion for therapy or prophylaxis (specify substance or drug); initial, up to 1 hour, including pump set-up and establishment of subcutaneous infusion pump	S	0440
90770	Subcutaneous infusion for therapy or prophylaxis (specify substance or drug); each additional hour (List separately in addition to code for primary procedure)	S	0437
90771	Subcutaneous infusion for therapy or prophylaxis (specify substance or drug); additional pump set-up with establishment of new subcutaneous infusion site(s) (List separately in addition to code for primary procedure)	S	0438
90772	Therapeutic, prophylactic or diagnostic injection (specify substance or drug); subcutaneous or intramuscular	S	0437
90773	Therapeutic, prophylactic or diagnostic injection (specify substance or drug); intra-arterial	S	0438
90776	Therapeutic, prophylactic or diagnostic injection (specify substance or drug); each additional sequential push of the same substance/drug provided in a facility (List separately in addition to code for primary procedure)	N	
90779	Unlisted therapeutic, prophylactic or diagnostic intravenous or intra-arterial injection or infusion	S	0436
96401	Chemotherapy administration, subcutaneous or intramuscular; non-hormonal anti-neoplastic	S	0438
96402	Chemotherapy administration subcutaneous or intramuscular; hormonal anti-neoplastic	S	0438
96405	Chemotherapy administration; intralesional, up to and including 7 lesions	S	0438
96406	Chemotherapy administration; intralesional, more than 7 lesions	S	0438
96416	Chemotherapy administration, intravenous infusion technique; initiation of prolonged chemotherapy infusion (more than 8 hours), requiring use of portable or implantable pump	S	0441
96420	Chemotherapy administration, intra-arterial; push technique	S	0439
96422	Chemotherapy administration, intra-arterial; infusion technique, up to one hour	S	0441
96423	Chemotherapy administration, intra-arterial; infusion technique, each additional hour up to 8 hours (List separately in addition to code for primary procedure)	S	0438
96425	Chemotherapy administration, intra-arterial; infusion technique, initiation of prolonged infusion (more than 8 hours), requiring the use of a portable or implantable pump	S	0441
96440	Chemotherapy administration into pleural cavity, requiring and including thoracentesis	S	0441

[1] **HCPCS Level I/CPT only © 2006 American Medical Association (or such other date of publication of CPT). All Rights Reserved.**

FIGURE 13-3-8 CROSSWALK FROM HCPCS LEVEL I[1] CODES FOR DRUG ADMINISTRATION TO DRUG ADMINISTRATION APCS (CONTINUED)

HCPCS LEVEL I[1] CODE	DESCRIPTION	SI	APC
96445	Chemotherapy administration into peritoneal cavity, requiring and including peritoneocentesis	S	0441
96450	Chemotherapy administration, into CNS (e.g., intrathecal), requiring and including spinal puncture	S	0441
96521	Refilling and maintenance of portable pump	S	0440
96522	Refilling and maintenance of implantable pump or reservoir for drug delivery, systemic (e.g., intravenous, intra-arterial)	S	0440
96523	Irrigation of implanted venous access device for drug delivery systems	Q	0624
96542	Chemotherapy injection, subarachnoid or intraventricular via subcutaneous reservoir, single or multiple agents	S	0438
96549	Unlisted chemotherapy procedure	S	0436

[1] **HCPCS Level I/CPT only © 2006 American Medical Association (or such other date of publication of CPT). All Rights Reserved.**

2. The following non-chemotherapy HCPCS codes have also been created that are similar to CPT codes for initiation of prolonged chemotherapy infusion requiring a pump and pump maintenance and refilling codes so hospitals can bill for services when provided to patients who require extended infusions for non-chemotherapy medications including drugs for pain (see Figure 13-3-9).

FIGURE 13-3-9 NON-CHEMOTHERAPY PROLONGED INFUSION CODES THAT REQUIRE A PUMP

HCPCS LEVEL I[1] CODE	DESCRIPTION	SI	APC
C8957	Intravenous infusion for therapy/diagnosis; initiation of prolonged infusion (more than 8 hours), requiring use of portable or implantable pump	S	0441

[1] **HCPCS Level I/CPT only © 2006 American Medical Association (or such other date of publication of CPT). All Rights Reserved.**

3. Packaged HCPCS Level I codes for drug administration should continue to be billed to ensure accurate payment in the future. These are bill changes for HCPCS Level I codes with SI of **N** that will be used as the basis for setting median costs for each drug administration HCPCS Level I code in the future.

4. HCPCS Level I[4] codes 90772-90774 each represent an injection and as such, one unit of the code may be billed each time there is a separate injection that meets the definition of the code.

5. Drugs for which the median cost per day is greater than $60 are paid separately and are not packaged into the payment for the drug administration. Separate payment for

[4] HCPCS Level I/CPT only © 2006 American Medical Association (or such other date of publication of CPT). All Rights Reserved.

drugs with a median cost in excess of $60 will result in more equitable payment for both the drugs and their administration.

F. Coding and Payment Policies for Drugs and Supplies.

1. Drug Coding.

a. Drugs for which separate payment is allowed are designated by SI **K** and must be reported using the appropriate HCPCS code.

b. Drugs that are reported without a HCPCS code will be packaged under the revenue center code, under OPPS: 250, 251, 252, 254, 255, 257, 258, 259, 631, 632, or 633.

c. Drugs billed using revenue code 636 ("Drugs requiring detailed coding") require use of the appropriate HCPCS code, or they will be denied.

d. Reporting charges of packaged drugs is critical because packaged drug costs are used for calculating outlier payments and hospital costs for the procedure and service with which the drugs are used in the course of the annual OPPS updates.

2. Payment for the Unused Portion of a Drug.

a. Once a drug is reconstituted in the hospital's pharmacy, it may have a limited shelf life. Since an individual patient may receive less than the fully reconstituted amount, hospitals are encouraged to schedule patients in such a way that the hospital can use the drug most efficiently. However, if the hospital must discard the remainder of a vial after administering part of it to a TRICARE patient, the provider may bill for the amount of the drug discarded, along with the amount administered.

b. In the event that a drug is ordered and reconstituted by the hospital's pharmacy, but not administered to the patient, payment will be made under OPPS.

EXAMPLE 1: Drug X is available only in a 100-unit size. A hospital schedules three patients to receive drug X on the same day within the designated shelf life of the product. An appropriate hospital staff member administers 30 units to each patient. The remaining 10 units are billed to OPPS on the account of the last patient. Therefore, 30 units are billed on behalf of the first patient seen, and 30 units are billed on behalf of the second patient seen. Forty units are billed on behalf of the last patient seen because the hospital had to discard 10 units at that point.

EXAMPLE 2: An appropriate hospital staff member must administer 30 units of drug X to a patient, and it is not practical to schedule another patient for the same drug. For example, the hospital has only one patient who requires drug X, or the hospital sees the patient for the first time and does not know the patient's condition. The hospital bills for 100 units on behalf of the patient, and OPPS pays for 100 units.

c. Coding for Supplies.

(1) Supplies that are an integral component of a procedure or treatment are not reported with a HCPCS code.

(2) Charges for such supplies are typically reflected either in the charges on the line for the HCPCS for the procedure, or on another line with a revenue code that will result in the charges being assigned to the same cost center to which the cost of those services are assigned in the cost report.

(3) Hospitals should report drugs that are treated as supplies because they are an integral part of a procedure or treatment under the revenue code associated with the cost center under which the hospital accumulates the costs for the drugs.

G. Orphan Drugs.

1. Continue to use the following criteria for identifying single indication orphan drugs that are used solely for orphan conditions:

a. The drug is designated as an orphan drug by the FDA and approved by the FDA for treatment of only one or more orphan condition(s).

b. The current United States Pharmacopoeia Drug Information (USPDI) shows that the drug has neither an approved use nor an off-label use for other than the orphan condition(s).

2. Twelve single indication orphan drugs have currently been identified as having met these criteria.

3. Payment Methodology.

a. Pay all 12 single indication orphan drugs at the rate of 88% of AWP or 106 of the ASP, whichever is higher.

b. However, for drugs where 106% of ASP would exceed 95% of AWP, payment would be capped at 95% of AWP, which is the upper limit allowed for sole source specified covered outpatient drugs.

H. Vaccines.

1. Hospitals will be paid for influenza, pneumococcal pneumonia and hepatitis B vaccines based on allowable charge methodology; i.e., will be paid the CMAC rate for these vaccines.

2. Separately payable vaccines other than influenza, pneumococcal pneumonia and hepatitis B will be paid under their own APC.

3. See Figure 13-3-10 for vaccine administration codes and SIs.

FIGURE 13-3-10 VACCINE ADMINISTRATION CODES AND STATUS INDICATORS

HCPCS LEVEL 1[1] CODE	DESCRIPTION	SI	APC
G0008	Influenza vaccine administration	S	0350
G0009	Pneumococcal vaccine administration	S	0350
G0010	Hepatitis B vaccine administration	B	--
90465	Immunization admin, under 8 yrs old, with counseling; first injection	N	--
90466	Immunization admin, under 8 yrs old, with counseling; each additional injection	N	--
90467	Immunization admin, under 8 yrs old, with counseling; first intranasal or oral	N	--
90468	Immunization admin, under 8 yrs old, with counseling; each additional intranasal or oral	N	--
90471	Immunization admin, one vaccine injection	X	0437
90472	Immunization admin, each additional vaccine injections	X	0436
90473	Immunization admin, one vaccine by intranasal or oral	N	
90474	Immunization admin, each additional vaccine by intranasal or oral	N	--

[1] **HCPCS Level I/CPT only © 2006 American Medical Association (or such other date of publication of CPT). All Rights Reserved.**

I. Payment Policy for Radiopharmaceuticals.

Separately paid radiopharmaceuticals are classified as "specified covered outpatient drugs" subject to the following packaging and payment provisions:

1. The threshold for the establishment of separate APCs for radiopharmaceuticals is $60.

2. A radiopharmaceutical that is covered and furnished as part of covered outpatient department services for which a HCPCS code has not been assigned will be reimbursed an amount equal to 95% of its AWP.

3. Radiopharmaceuticals will be excluded from receiving outlier payments.

4. Applications will be accepted for pass-through status; however, in the event the manufacturer seeking pass-through status for a radiopharmaceutical does not submit data in accordance with the requirements specified for new drugs and biologicals, payment will be set for the new radiopharmaceutical as a "specified covered outpatient drug."

J. Blood and Blood Products.

1. Since the OPPS was first implemented, separate payment has been made for blood and blood products in APCs rather than packaging them into payment for the procedures with which they were administered. The APCs for these products are intended to recover the costs of the products.

2. Administrative costs for the processing and storage specific to the transfused blood product are included in the APC payment, which is based on hospitals' charges.

3. Payment for the collection, processing, and storage of autologous blood, as described by HCPCS Level I[5] code 86890 and used in transfusion, is made through APC 347 (Level III Transfusion Laboratory Procedures).

4. Payment rates for blood and blood products will be determined based on median costs. Refer to Figure 13-3-11 for APC assignment of blood and blood product codes.

FIGURE 13-3-11 ASSIGNMENT OF BLOOD AND BLOOD PRODUCT CODES

HCPCS	EXPIRED HCPCS	STATUS INDICATOR	DESCRIPTION	APC
P9010		K	Whole blood for transfusion	0950
P9011		K	Split unit of blood	0967
P9012		K	Cryoprecipitate each unit	0952
P9016		K	RBC leukocytes reduced	0954
P9017		K	Plasma 1 donor frz w/in 8 hr	9508
P9019		K	Platelets, each unit	0957
P9020		K	Platelet rich plasma unit	0958
P9021		K	Red blood cells unit	0959
P9022		K	Washed red blood cells unit	0960
P9023		K	Frozen plasma, pooled, sd	0949
P9031		K	Platelets leukocytes reduced	1013
P9032		K	Platelets, irradiated	9500
P9033		K	Platelets leukoreduced irradiated	0968
P9034		K	Platelets, pheresis	9507
P9035		K	Platelets pheresis leukoreduced	9501
P9036		K	Platelet pheresis irradiated	9502
P9037		K	Platelet pheresis leukoreduced irradiated	1019
P9038		K	RBC irradiated	9505
P9039		K	RBC deglycerolized	9504
P9040		K	RBC leukoreduced irradiated	0969
P9043		K	Plasma protein fract, 5%, 50 ml	0956
P9044		K	Cryoprecipitate reduced plasma	1009
P9048		K	Granulocytes, pheresis unit	9506
P9051	C1010	K	Blood, L/R, CMV-NEG	1010
P9052	C1011	K	Platelets, HLA-m, L/R, unit	1011
P9053	C1015	K	Plt, pher, L/R, CMV, irradiated	1020
P9054	C1016	K	Blood, L/R, Froz/Degly/Washed	1016
P9055	C1017	K	Plt, Aph/Pher, L/R, CMV-Neg	1017

[5] HCPCS Level I/CPT only © 2006 American Medical Association (or such other date of publication of CPT). All Rights Reserved.

FIGURE 13-3-11 ASSIGNMENT OF BLOOD AND BLOOD PRODUCT CODES (CONTINUED)

HCPCS	EXPIRED HCPCS	STATUS INDICATOR	DESCRIPTION	APC
P9056	C1018	K	Blood, L/R, Irradiated	1018
P9057	C1020	K	RBC, frz/deg/wash, L/R irradiated	1021
P9058	C1021	K	RBC, L/R, CMV-Neg, irradiated	1022
P9059	C1022	K	Plasma, frz within 24 hours	0955
P9060	C9503	K	Fresh frozen plasma, ea unit	9503

5. For CY 2007, blood clotting factors will be paid at ASP plus 6%, plus an additional payment for the furnishing fee that is also a part of the payment for blood clotting factors furnished in physician's offices. The CY 2007 furnishing fee was $0.152 per unit.

6. For CY 2008, blood clotting factors will be paid at ASP plus 5%, plus an additional furnishing fee amount of $0.158 per unit.

K. Adjustment to Payment in Cases of Devices Replaced with Partial Credit for the Replaced Device.

1. Hospitals will be required to append the modifier "FC" to the HCPCS code for the procedure in which the device was inserted on claims when the device that was replaced with partial credit under warranty, recall, or field action is one of the devices in Figure 13-3-12. Hospitals should not append the modifier to the HCPCS procedure code if the device is not listed in Figure 13-3-12.

2. Claims containing the "FC" modifier will not be accepted unless the modifier is on a procedure code with SI **S**, **T**, **V**, or **X**.

3. If the APC to which the procedure is assigned is one of the APCs listed in Figure 13-3-13, the contractor will reduce the unadjusted payment rate for the procedure by an amount equal to the percent in Figure 13-3-13 for partial credit device replacement multiplied by the unadjusted payment rate.

4. The partial credit adjustment will occur before wage adjustment and before the assessment to determine if the reductions for multiple procedures (signified by the presence of more than on procedure on the claim with a SI of **T**), discontinued service (signified by modifier 73) or reduced service (signified by modifier 52) apply.

L. Payment When Devices Are Replaced Without Cost or Where Credit for a Replacement Device is Furnished to the Hospital.

1. Payments will be reduced for selected APCs in cases in which an implanted device is replaced without cost to the hospital or with full credit for the removed device. The amount of the reduction to the APC rate will be calculated in the same manner as the offset amount that would be applied if the implanted device assigned to the APC has pass-through status.

2. This permits equitable adjustments to the OPPS payments contingent on meeting all of the following criteria:

a. All procedures assigned to the selected APCs must require implantable devices that would be reported if device replacement procedures are performed;

b. The required devices must be surgically inserted or implanted devices that remain in the patient's body after the conclusion of the procedures, at least temporarily; and

c. The offset percent for the APC (i.e., the median cost of the APC without device costs divided by the median cost of the APC with device costs) must be significant--significant offset percent is defined as exceeding 40%.

3. The presence of the modifier "FB" ["Item Provided Without Cost to Provider, Supplier, or Practitioner or Credit Received for Replacement (examples include, but are not limited to devices covered under warranty, replaced due to defect, or provided as free samples)"] would trigger the adjustment in payment if the procedure code to which modifier "FB" was amended appeared in Figure 13-3-12 and was also assigned to one of the APCs listed in Figure 13-3-13.

FIGURE 13-3-12 DEVICES FOR WHICH "FC" AND "FB" MODIFIERS MUST BE REPORTED WITH THE PROCEDURE WHEN FURNISHED WITHOUT COST OR AT FULL OR PARTIAL CREDIT FOR A REPLACEMENT DEVICE

DEVICE	DESCRIPTION
C1721	AICD, dual chamber
C1722	AICS, single chamber
C1764	Event recorder, cardiac
C1767	Generator, neurostim, imp
C1771	Rep Dev urinary, w/sling
C1772	Infusion pump, programmable
C1776	Joint device (implantable)
C1777	Lead, AICD, endo single coil
C1778	Lead neurostimulator
C1779	Lead, pmkr, transvenous VDD
C1785	Pmkr, dual rate-resp
C1786	Pmkr, single rate-resp
C1813	Prostheses, penile, inflatab
C1815	Pros, urinary sph, imp
C1820	Generator, neuro, rechg bat sys
C1882	AICD, other than sing/dual
C1891	Infusion pump, non-prog, perm
C1895	Lead, AICD, endo dual coil
C1896	Lead, AICD, non sing/dual
C1897	Lead, neurostim, test kit
C1898	Lead, pmkr, other than trans

FIGURE 13-3-12 DEVICES FOR WHICH "FC" AND "FB" MODIFIERS MUST BE REPORTED WITH THE PROCEDURE WHEN FURNISHED WITHOUT COST OR AT FULL OR PARTIAL CREDIT FOR A REPLACEMENT DEVICE (CONTINUED)

DEVICE	DESCRIPTION
C1899	Lead, pmkr/AICD combination
C1900	Lead coronary venous
C2619	Pmkr, dual, non rate-resp
C2620	Pmkr, single, non rate-resp
C2621	Pmkr, other than sing/dual
C2622	Pmkr, other than sing/dual
C2626	Infusion pump, non-prog, temp
C2631	Rep dev, urinary, w/o sling
L8614	Cochlear device/system

FIGURE 13-3-13 ADJUSTMENTS TO APCS IN CASES OF DEVICES REPORTED WITHOUT COST OR FOR WHICH FULL OR PARTIAL CREDIT IS RECEIVED FOR CY 2008

APC	SI	APC GROUP TITLE	REDUCTION FOR PARTIAL CREDIT CASE (PERCENT)	REDUCTION FOR FULL CREDIT CASE (PERCENT)	PAYMENT RATE	ADJUSTED PAYMENT FOR PARTIAL CREDIT CASE	ADJUSTED PAYMENT FOR FULL CREDIT CASE
0039	S	Level I Implantation of Neurostimulator	41.37	82.73	$11,877	$6,964	$2,051
0040	S	Percutaneous Implantation of Neurostimulator Electrodes, Excluding Cranial Nerve	28.14	56.27	$4,063	$2,920	$1,1777
0061	S	Laminectomy or Incision for Implantation of Neurostimulator Electrodes, Excluding Cranial Nerve	30.30	60.60	$5,278	$3,679	$2,079
0089	T	Insertion/Replacement of Permanent Pacemaker and Electrodes	36.50	72.99	$7,748	$4,921	$2,093
0090	T	Insertion/Replacement of Pacemaker Pulse Generator	38.01	76.01	$6,423	$3,982	$1,541
0106	T	Insertion/Replacement/ Repair of Pacemaker and/or Electrodes	28.13	56.25	$4,428	$3,183	$1,937
0107	T	Insertion of Cardioverter-Defibrillator	44.56	89.11	$21,262	$11,789	$2,315
0108	T	Insertion/Replacement/ Repair of Cardioverter-Defibrillator Leads	44.62	89.24	$25,787	$14,281	$2,775
0222	S	Implantation of Neurological Device	42.43	84.86	$15,337	$8,830	$2,322
0225	S	Implantation of Neurostimulator Electrodes, Cranial Nerve	40.29	80.57	$14,061	$8,397	$2,732

FIGURE 13-3-13 ADJUSTMENTS TO APCS IN CASES OF DEVICES REPORTED WITHOUT COST OR FOR WHICH FULL OR PARTIAL CREDIT IS RECEIVED FOR CY 2008 (CONTINUED)

APC	SI	APC GROUP TITLE	REDUCTION FOR PARTIAL CREDIT CASE (PERCENT)	REDUCTION FOR FULL CREDIT CASE (PERCENT)	PAYMENT RATE	ADJUSTED PAYMENT FOR PARTIAL CREDIT CASE	ADJUSTED PAYMENT FOR FULL CREDIT CASE
0227	T	Implantation of Drug Infusion Devices	40.73	80.73	$11,713	$6,985	$2,257
0229	T	Transcatheter Placement of Intravascular Shunts	41.47	82.94	$25,046	$14,659	$4,273
0259	T	Level IV ENT Procedures	43.08	86.15	$17,199	$8,790	$2,382
0315	S	Level II Implantation of Neurostimulator	25.78	51.56	$5,327	$3,954	$2,580
0385	S	Level I Prosthetic Urological Procedures	31.77	63.53	$9,180	$6,264	$3,348
0386	S	Level II Prosthetic Urological Procedures	41.26	82.52	$16,544	$9,718	$2,892
0418	T	Insertion of Left Ventricular Pacing Elect	29.44	58.88	$5,207	$3,674	$2,141
0625	T	Level IV Vascular Access Procedures	38.57	77.13	$6,961	$4,276	$1,592
0654	T	Insertion/Replacement of a Permanent Dual Chamber Pacemaker	37.31	74.62	$8,919	$5,591	$2,264
0655	T	Insertion/Replacement/ Conversion of a Permanent Dual Chamber Pacemaker	36.58	73.15	$4,497	$2,852	$1,208
0680	S	Insertion of Patient Activated Event Recorders	41.43	82.86	$17,495	$10,244	$2,993
0681	T	Knee Arthroplasty	41.43	82.86	$17,495	$10,244	$2,993

4. If the APC to which the device code (i.e., one of the codes in Figure 13-3-12) is assigned is on the APCs listed in Figure 13-3-13, the unadjusted payment rate for the procedure APC will be reduced by an amount equal to the percent in Figure 13-3-13 times the unadjusted payment rate.

5. In cases in which the device is being replaced without cost, the hospital will report a token device charge. However, if the device is being inserted as an upgrade, the hospital will report the difference between its usual charge for the device being replaced and the credit for the replacement device.

6. Multiple procedure reductions would also continue to apply even after the APC payment adjustment to remove payment for the device cost, because there would still be the expected efficiencies in performing the procedure if it was provided in the same operative session as another surgical procedure. Similarly, if the procedure was interrupted before administration of anesthesia (i.e., there was modifier 52 or 73 on the same line as the procedure), a 50% reduction would be taken from the adjusted amount.

M. Policies Affecting Payment of New Technology Services.

1. A process was developed that recognizes new technologies that do not otherwise meet the definition of current orphan drugs, or current cancer therapy drugs and biologicals and brachytherapy, or current radiopharmaceutical drugs and biologicals products. This process, along with transitional pass-throughs, provides additional payment for a significant share of new technologies.

2. Special APC groups were created to accommodate payment for new technology services. In contrast to the other APC groups, the new technology APC groups did not take into account clinical aspects of the services they were to contain, but only their costs.

3. The SI **K** is used to denote the APCs for drugs, biologicals and pharmaceuticals that are paid separately from, and in addition to, the procedure or treatment with which they are associated, yet are not eligible for transitional pass-through payment.

4. New items and services will be assigned to these new technology APCs when it is determined that they cannot appropriately be placed into existing APC groups. The new technology APC groups provide a mechanism for initiating payment at an appropriate level within a relatively short time frame.

5. As in the case of items qualifying for the transitional pass-through payment, placement in a new technology APC will be temporary. After information is gained about actual hospital costs incurred to furnish a new technology service, it will be moved to a clinically-related APC group with comparable resource costs.

6. If a new technology service cannot be moved to an existing APC because it is dissimilar clinically and with respect to resource costs from all other APCs, a separate APC will be created for such services.

7. Movement from a new technology APC to a clinically-related APC will occur as part of the annual update of APC groups.

8. The new technology APC groups have established payment rates for the APC groups based on the midpoint of ranges of possible costs; for example, the payment amount for a new technology group reflecting a range of costs from $300 to $500 would be set at $400. The cost range for the groups reflects current cost distributions, and TRICARE reserves the right to modify the ranges as it gains experience under the OPPS.

9. There are two parallel series of technology APCs covering a range of costs from less than $50 to $6,000.

a. The two parallel sets of technology APCs are used to distinguish between those new technology services designated with a SI of **S** and those designated as **T**. These APCs allow assignment to the same APC group procedures that are appropriately subject to a multiple procedure payment reduction (**T**) with those that should not be discounted (**S**).

b. Each set of technology APC groups have identical group titles and payment rates, but a different SI.

c. The new series of APC numbers allow for the narrowing of the cost bands and flexibility in creating additional bands as future needs may dictate. Following are the narrowed incremental cost bands for the two series of new technology APCs:

(1) From $0 to $50 in increments of $10.

(2) From $50 to $100 in a single $50 increment.

(3) From $100 through $2,000 in intervals of $100.

(4) From $2,000 through $6,000 in intervals of $500.

10. Beneficiary cost-sharing/copayment amounts for items and services in the new technology APC groups are dependent on the eligibility status of the beneficiary at the time the outpatient services were rendered (i.e., those deductibles and cost-sharing/copayment amounts applicable to Prime, Extra and Standard beneficiary categories). (Refer to Chapter 2, Addendum A for applicable deductible cost-sharing/copayment amounts for outpatient hospital services.)

11. Process and Criteria for Assignment to a New Technology APC Group.

a. Services Paid Under New Technology APCs.

(1) Limit eligibility for placement in new technology APCs to complete services and procedures.

(2) Items, material, supplies, apparatuses, instruments, implements, or equipment that are used to accomplish a more comprehensive service or procedure would not be eligible for placement in a new technology APC.

(3) A service that qualifies for a new technology APC may be a complete, stand-alone service (for example, water-induced thermotherapy of the prostate or cryosurgery of the prostate), or it may be a service that would always be billed in combination with other services (for example, coronary artery brachytherapy).

(a) In the latter case, the new technology procedure, even though billed in combination with other, previously existing procedures, describes a distinct procedure with a beginning, middle, and end.

(b) Drugs, supplies, devices, and equipment in and of themselves are not distinct procedures with a beginning, middle and end. Rather drugs, supplies, devices, and equipment are used in the performance of a procedure.

(4) Unbundled components that are integral to a service or procedure (for example, preparing a patient for surgery or preparation and application of a wound dressing for wound care) are not eligible for consideration for a new technology.

b. Criteria for determining whether a service will be assigned to a new technology APC.

(1) The most important criterion in determining whether a technology is "truly new" and appropriate for a new APC is the inability to appropriately, and without redundancy, describe the new, complete (or comprehensive) service with any combination of existing HCPCS Level I and II codes. In other words, a "truly new" service is one that cannot be appropriately described by existing HCPCS codes, and a new HCPCS code needs to be established in order to describe the new procedure.

(2) The service is one that could not have been adequately represented in the claims data being used for the most current annual payment update; i.e., the item is one service that could not have been billed to the Medicare program in 1996 or, if it was available in 1996, the costs of the service could not have been adequately represented in 1996 data.

(3) The service does not qualify for an additional payment under the transitional pass-through provisions.

(4) The service cannot reasonably be placed in an existing APC group that is appropriate in terms of clinical characteristics and resource costs. It is unnecessary to assign a new service to a new technology APC if it may be appropriately placed in a current APC.

(5) The service falls within the scope of TRICARE benefits.

(6) The service is determined to be reasonable and necessary.

NOTE: The criterion that the service must have a HCPCS code in order to be assigned to a new technology APC has been removed. This is supported by the rationale that in order to be considered for a new technology APC, a truly new service cannot be adequately described by existing codes. Therefore, in the absence of an appropriate HCPCS code, a new HCPCS code will be created that describes the new technology service. The new HCPCS would be solely for hospitals to use when billing under the OPPS.

N. Coding And Payment Of ED Visits.

1. CPT defines an ED as "an organized hospital based facility for the provision of unscheduled episodic services to patients who present for immediate medical attention. The facility must available 24 hours a day."

2. Prior to CY 2007, under the OPPS the billing of ED CPT codes was restricted to services furnished at facilities that met this CPT definition. Based on the above definition, facilities open less than 24 hours a day could not report ED CPT codes.

3. Sections 1866(a)(1)(I), 1866(a)(1)(N), and 1867 of the Act impose specific obligations on Medicare-participating hospitals that offer emergency services. These obligations concern individuals who come to a hospital's dedicated emergency department (DED) and request examination or treatment for medical conditions, and apply to all of these individuals, regardless of whether or not they are beneficiaries of any program under the Act. Section 1867(h) of the Act specifically phohibits a delay in providing required screening

or stabilization services in order to inquire about the individual's payment method or insurance status.

4. These provisions are frequently referred to as the Emergency Medical Treatment and Labor Act (EMTALA). The EMTALA regulations define DED "as any department or facility of the hospital, regardless of whether it is located on or off the main campus, that meets at least one of the following requirements:

a. It is licensed by the State in which it is located under applicable State law as an emergency room or ED;

b. It is held out to the public (by name, posted signs, advertising, or other means) as a place that provides care for emergency medical conditions on an urgent basis without requiring a previously scheduled appointment; or

c. During the calendar year immediately preceding the calendar year in which a determination under the regulations is being made, based on a representative sample of patient visits that occurred during the calendar year, it provides at least one-third of all of its outpatient visits for the treatment of emergency medical conditions on an urgent basis without requiring previously scheduled appointment.

5. There are some departments or facilities of hospitals that met the definition of a dedicated ED under the EMTALA regulations, but did not meet the more restrictive CPT definition of ED. For example, a hospital department or facility that met the definition of a DED might not have been available 24 hours a day, seven days a week.

6. To determine whether visits to EDs of facilities (referred to as Type B ED) that incur EMTALA obligations, but do not meet the more prescriptive expectations that are consistent with the CPT definition of an ED (referred to as Type A ED) have different resource costs than visits to either clinics or Type A EDs, five G codes were developed for use by hospitals to report visits to all entities that meet the definition of a DED under the EMTALA regulations, but that are not Type A EDs. These codes are called "Type B ED visit codes." EDs meeting the definition of a DED under the EMTALA regulations, but which are not Type A EDs (i.e., they may meet the DED definition but are not available 24 hours a day, seven days a week).

FIGURE 13-3-14 FINAL HCPCS CODES TO BE USED TO REPORT ED VISITS PROVIDED IN TYPE B EDS

HCPCS CODE	SHORT DESCRIPTOR	LONG DESCRIPTOR
G0380	Level 1 Hosp Type B Visit	Level 1 hospital ED visit provided in a Type B ED. (The ED must meet at least one of the following requirements: (1) It is licensed by the State in which it is located under applicable State law as an emergency room or ED; (2) It is held out to the public (by name, posted signs, advertising, or other means) as a place that provides care for emergency medical conditions on an urgent basis without requiring a previously scheduled appointment; or (3) During the calendar year immediately preceding the calendar year in which a determination under this section is being made, based on a representative sample of patient visits that occurred during that calendar year, it provides at least one-third of all of its outpatient visits for the treatment of emergency medical conditions on an urgent basis without requiring a previously scheduled appointment.)
G0381	Level 2 Hosp Type B Visit	Level 2 hospital ED visit provided in a Type B ED. (The ED must meet at least one of the following requirements: (1) It is licensed by the State in which it is located under applicable State law as an emergency room or ED; (2) It is held out to the public (by name, posted signs, advertising, or other means) as a place that provides care for emergency medical conditions on an urgent basis without requiring a previously scheduled appointment; or (3) During the calendar year immediately preceding the calendar year in which a determination under this section is being made, based on a representative sample of patient visits that occurred during that calendar year, it provides at least one-third of all of its outpatient visits for the treatment of emergency medical conditions on an urgent basis without requiring a previously scheduled appointment.)
G0382	Level 3 Hosp Type B Visit	Level 3 hospital ED visit provided in a Type B ED. (The ED must meet at least one of the following requirements: (1) It is licensed by the State in which it is located under applicable State law as an emergency room or ED; (2) It is held out to the public (by name, posted signs, advertising, or other means) as a place that provides care for emergency medical conditions on an urgent basis without requiring a previously scheduled appointment; or (3) During the calendar year immediately preceding the calendar year in which a determination under this section is being made, based on a representative sample of patient visits that occurred during that calendar year, it provides at least one-third of all of its outpatient visits for the treatment of emergency medical conditions on an urgent basis without requiring a previously scheduled appointment.)
G0384	Level 4 Hosp Type B Visit	Level 4 hospital ED visit provided in a Type B ED. (The ED must meet at least one of the following requirements: (1) It is licensed by the State in which it is located under applicable State law as an emergency room or ED; (2) It is held out to the public (by name, posted signs, advertising, or other means) as a place that provides care for emergency medical conditions on an urgent basis without requiring a previously scheduled appointment; or (3) During the calendar year immediately preceding the calendar year in which a determination under this section is being made, based on a representative sample of patient visits that occurred during that calendar year, it provides at least one-third of all of its outpatient visits for the treatment of emergency medical conditions on an urgent basis without requiring a previously scheduled appointment.)

FIGURE 13-3-14 FINAL HCPCS CODES TO BE USED TO REPORT ED VISITS PROVIDED IN TYPE B EDS (CONTINUED)

HCPCS CODE	SHORT DESCRIPTOR	LONG DESCRIPTOR
G0385	Level 5 Hosp Type B Visit	Level 5 hospital ED visit provided in a Type B ED. (The ED must meet at least one of the following requirements: (1) It is licensed by the State in which it is located under applicable State law as an emergency room or ED; (2) It is held out to the public (by name, posted signs, advertising, or other means) as a place that provides care for emergency medical conditions on an urgent basis without requiring a previously scheduled appointment; or (3) During the calendar year immediately preceding the calendar year in which a determination under this section is being made, based on a representative sample of patient visits that occurred during that calendar year, it provides at least one-third of all of its outpatient visits for the treatment of emergency medical conditions on an urgent basis without requiring a previously scheduled appointment.)

7. The five new Type B ED visit codes for services provided in a Type B ED will be assigned to the five newly established Clinical Visit APCs 0604, 0605, 0606, 0607, and 0608.

8. For CY 2007, the five CPT E/M ED visit codes for services provided in a Type A ED were assigned to the five newly-created ED Visit APCs 0609, 0613, 0614, 0615, and 0616.

9. The definition of Type A and Type B EDs was not modified for CY 2008 because its current definition accurately distinguished between these two types of ED.

10. For CY 2008, Type A Ed visits will continue to be paid based on the five ED Visit APCs, while Type B ED visits would continue to be paid based on the five Clinic Visit APCs.

11. A new "G" code (G0390 - Trauma response team activation associated with hospital critical care services) was also created (effective January 1, 2007) to be used in addition to CPT[6] procedure codes 99291 and 99292 to address the meaningful cost difference between critical care when billed with and without trauma activation.

a. If critical care is provided without trauma activation, the hospital will bill with either CPT[5] procedure code 99291, receiving payment for APC 0617.

b. However if trauma activation occurs, the hospital would be called to bill one unit of "G" code (G0390), report with revenue code 68x on the same date of service, thereby receiving payment for APC 0618.

12. The CPT Evaluation and Management (E/M) codes and other HCPCS codes currently assigned to the clinic visit APCs have been mapped in Figure 13-3-15 to 11 new APCs; five for clinic visits; five for ED visits; and one for critical care services, based on median costs and clinical consideration.

[6] CPT only © 2006 American Medical Association (or such other date of publication of CPT). All Rights Reserved.

FIGURE 13-3-15 ASSIGNMENT OF CPT E/M CODES AND OTHER HCPCS CODES TO NEW VISIT APCS FOR CY 2007

APC TITLE	APC	HCPCS	SHORT DESCRIPTOR
Level 1 Hospital Clinic Visits	0604	92012	Eye exam, established pat
		99201	Office/outpatient visit, new (Level 1)
		99211	Office/outpatient visit, est (Level 1)
		99241	Office consultation
		G0101	CA screen; pelvic/breast exam
		G0245	Initial foot exam Pt lops
		G0379	Direct admit hospital observ
Level 2 Hospital Clinic Visits	0605	92002	Eye exam, new patient
		92014	Eye exam and treatment
		99202	Office/outpatient visit, new (Level 2)
		99212	Office/outpatient visit, est (Level 2)
		99213	Office/outpatient visit, est (Level 3)
		99243	Office consultation (Level 3)
		99242	Office consultation (Level 2)
		99273	Confirmatory consultation (Level 3)
		99272	Confirmatory consultation (Level 2)
		99431	Initial care, normal newborn
		G0246	Follow-up eval of foot pt lop
		G0344	Initial preventive exam
Level 3 Hospital Clinic Visits	0606	90862	Medication management
		92004	Eye exam, new patient
		99203	Office/outpatient visit, new (Level 3)
		99214	Office/outpatient visit, est (Level 4)
		99274	Confirmatory consultation (Level 4)
		99244	Office consultation (Level 4)
		M0064	Visit for drug monitoring
Level 4 Hospital Clinic Visits	0607	99204	Confirmatory consultation (Level 1)
		99215	Office/outpatient visit, est (Level 5)
		99245	Office consultation (Level 5)
		99275	Confirmatory consultation (Level 5)
Level 5 Hospital Clinic Visits	0608	99205	Office/outpatient visit, new (Level 5)
		G0175	OPPS service, sched team conf
Level 1 Type A Emergency Visits	0609	99281	Emergency department visit
Level 2 Type A Emergency Visits	0613	99282	Emergency department visit
Level 3 Type A Emergency Visits	0614	99283	Emergency department visit
Level 4 Type A Emergency Visits	0615	99284	Emergency department visit
Level 5 Type A Emergency Visits	0616	99285	Emergency department visit
Critical Care	0617	99291	Critical care, first hour
Trauma Activation	0618	G0390	Trauma Respon. w/hosp criti

O. OPPS PRICER.

1. Common PRICER software will be provided to the contractor that includes the following data sources:

a. National APC amounts

b. Payment status by HCPCS code

c. Multiple surgical procedure discounts

d. Fixed dollar threshold

e. Multiplier threshold

f. Device offsets

g. Other payment systems pricing files (CMAC, DMEPOS, and statewide prevailings)

2. The following data elements will be extracted and forwarded to the outpatient PRICER for line item pricing.

a. Units;

b. HCPCS/Modifiers;

c. APC;

d. Status payment indicator;

e. Line item date of service;

f. Primary diagnosis code; and

g. Other necessary OCE output.

3. The following data elements will be passed into the PRICER by the contractors:

a. Wage indexes (same as DRG wage indexes);

b. Statewide CCRs as provided in CMS Final Rule;

c. Locality Code: Based on CBSA - two digit = rural and five digit = urban;

d. Hospital Type: Rural SCH = 1 and All Others = 0

4. The outpatient PRICER will return the line item APC and cost outlier pricing information used in final payment calculation. This information will be reflected in the

provider remittance notice and beneficiary Explanation of Benefits (EOB) with exception for an electronic 835 transaction. Paper EOBs and remits will reflect APCs at the line level and will also include indication of outlier payments and pricing information for those services reimbursed under other than OPPS methodology's, e.g., CMAC (SI of **A**) when applicable.

5. If a claim has more than one service with a SI of **T** or a SI of **S** within the coding range of 10000 - 69999, and any lines with SI of **T** or a SI within the coding range of 10000 - 69999 have less than $1.01 as charges, charges for all lines will be summed and the charges will then be divided up proportionately to the payment rates for each line (refer to Figure 13-3-16). The new charge amount will be used in place of the submitted charge amount in the line item outlier calculator.

FIGURE 13-3-16 PROPORTIONAL PAYMENT FOR "T" LINE ITEMS

SI	CHARGES	PAYMENT RATE	NEW CHARGES AMOUNT
T	$19,999	$6,000	$12,000
T	$1	$3,000	$6,000
T	$0	$1,000	$2,000
Total	$20,000	$10,000	$20,000

NOTE: **Because total charges here are $20,000 and the first SI of "T" gets $6,000 of the $10,000 total payment, the new charge for that line is $6,000/$10,000 x $20,000 = $12,000.**

P. TRICARE Specific Procedures/Services.

1. TRICARE specific APCs have been assigned for half-day PHPs.

2. Other procedures that are normally covered under TRICARE but not under Medicare will be assigned SI of **A** (i.e., services that are paid under some payment method other than OPPS) until they can be placed into existing or new APC groups.

Q. Validation Reviews.

OPPS claims are not subject to validation review.

R. Hospital-Based Birthing Centers.

Hospital-based birthing centers will be reimbursed the same as freestanding birthing centers except the all inclusive rate consisting of the CMAC for CPT[7] procedure code 59400 and the state specific non-professional component, will lag two months (i.e., April 1 instead of February 1).

IV. EFFECTIVE DATE May 1, 2009.

- END -

[7] CPT only © 2006 American Medical Association (or such other date of publication of CPT). All Rights Reserved.

CHAPTER 13
SECTION 4

CLAIMS SUBMISSION AND PROCESSING REQUIREMENTS

ISSUE DATE: July 27, 2005
AUTHORITY: 10 U.S.C. 1079(j)(2) and 10 U.S.C. 1079(h)

I. APPLICABILITY

This policy is mandatory for the reimbursement of services provided either by network or non-network providers. However, alternative network reimbursement methodologies are permitted when approved by the TRICARE Management Activity (TMA) and specifically included in the network provider agreement.

II. ISSUE

To describe additional claims submission and processing requirements.

III. POLICY

Appropriate Bill Types:

A. Bill types subject to Outpatient Prospective Payment System (OPPS).

All outpatient hospital bills (bill types 013X with condition code 41, 013X without condition code 41), with the exception of bills from providers excluded under Chapter 13, Section 1, paragraph III.D.1.b.(5) will be subject to the OPPS.

B. Reporting Requirements.

1. Payment of outpatient hospital claims will be based on the from date on the claim.

EXAMPLE: Claims with from dates on or before May 1, 2009 (implementation of OPPS) will not process as OPPS - this will also apply to version changes and pricing changes.

2. Hospitals should make every effort to report all services performed on the same day on the same claim to ensure proper payment under OPPS.

C. Procedures for Submitting Late Charges.

1. Hospitals may not submit a late charge bill (frequency 5 in the third position of the bill type) for bill types 013X effective for claims with dates of service on or after May 1, 2009 (implementation of OPPS).

2. They must submit an adjustment bill for any services required to be billed with Healthcare Common Procedure Coding System (HCPCS) codes, units, and line item dates of service by reporting frequency 7 or 8 in the third position of the bill type. Separate bills containing only late charges will not be permitted. Claims with bill type 0137 and 0138 should report the original claim number in Form Location (FL) 64 on the CMS 1450 UB-04 claim form.

3. The submission of an adjustment bill, instead of a late charge bill, will ensure proper duplicate detection, bundling, correct application of coverage policies and proper editing of Outpatient Code Editor (OCE) under OPPS.

NOTE: The contractors will take appropriate action in those situations where either a replacement claim (TOB 0137) or voided/cancelled claim (TOB 0138) is received without an initial claim (TOB 0131) being on file. Adjustments resulting in overpayments will be set for recoupment allowing an auto offset.

D. Claim Adjustments. Adjustments to OPPS claims shall be priced based on the from date on the claim (using the rules and weights and rates in effect on that date) regardless of when the claim is submitted. Contractor's shall maintain at least three years of APC relative weights, payment rates, wage indexes, etc., in their systems. If the claim filing deadline has been waived and the from date is more than three years before the reprocessing date, the affected claim or adjustment is to be priced using the earliest APC weights and rates on the contractor's system.

E. Proper Reporting of Condition Code G0 (Zero).

1. Hospitals should report Condition Code G0 on FLs 18-28 when multiple medical visits occurred on the same day in the same revenue center but the visits were distinct and constituted independent visits. An example of such a situation would be a beneficiary going to the emergency room twice on the same day - in the morning for a broken arm and later for chest pain.

2. Multiple medical visits on the same day in the same revenue center may be submitted on separate claims. Hospitals should report condition code G0 on the second claim.

3. Claims with condition code G0 should not be automatically rejected as a duplicate claim.

4. Proper reporting of Condition Code G0 allows for proper payment under OPPS in this situation. The OCE contains an edit that will reject multiple medical visits on the same day with the same revenue code without the presence of Condition Code G0.

5. The following figure describes actions the OCE will take when multiple medical visits occur on the same day in the same revenue code center:

FIGURE 13-4-1 ACTIONS TAKEN WHEN MULTIPLE MEDICAL VISITS OCCUR ON THE SAME DAY

EVALUATION & MANAGEMENT (E&M)	REVENUE CENTER	CONDITION CODE	OCE ACTION
2 or more	Two or more E&M codes have the same revenue center	No G0	Assign medical APC to each line item with E&M code and deny all line items with E&M code except the line item with the highest APC payment
2 or more	Two or more E&M codes have the same revenue center	G0	Assign medical APC to each line item with E&M code

F. Clinical Diagnostic Laboratory Services Furnished to Outpatients.

1. Payment for clinical diagnostic laboratory services will not be paid under OPPS.

2. Payment for these services will be made under the CHAMPUS Maximum Allowable Charge (CMAC) System.

3. Hospitals should report HCPCS codes for clinical diagnostic laboratory services.

G. OPPS Modifiers.

TRICARE requires the reporting of HCPCS Level I and II modifiers for accuracy in reimbursement, coding consistency, and editing.

IV. EFFECTIVE DATE May 1, 2009.

- END -

CHAPTER 13
SECTION 5

MEDICAL REVIEW AND ALLOWABLE CHARGE REVIEW UNDER THE OUTPATIENT PROSPECTIVE PAYMENT SYSTEM (OPPS)

ISSUE DATE: July 27, 2005
AUTHORITY: 10 U.S.C. 1079(j)(2) and 10 U.S.C. 1079(h)

I. APPLICABILITY

This policy is mandatory for the reimbursement of services provided either by network or non-network providers. However, alternative network reimbursement methodologies are permitted when approved by the TRICARE Management Activity (TMA) and specifically included in the network provider agreement.

II. ISSUE

To describe the medical review and allowable charge review of hospital outpatient claims.

III. POLICY

A. Medical review under the hospital OPPS.

1. The methodology of review for outpatient claims does not change under the OPPS.

2. The goal of medical review is to identify inappropriate billing and to ensure that payment is not made for noncovered services. Contractors may review any claim at any time, including requesting medical records, to ensure that payment is appropriate.

B. All OPPS review of claims processing with the exception of the Inpatient Only Procedures List, would be considered allowable charge review.

IV. EFFECTIVE DATE May 1, 2009.

- END -

CHAPTER 13
ADDENDUM A1

DEVELOPMENT SCHEDULE FOR TRICARE OCE/APC QUARTERLY UPDATE

CRITICAL TASKS & MILESTONES			
#	WHO	EVENT	DAYS
1	3M	Preliminary CMS edit & logic changes to TRICARE (new edits, logic, flags, etc.)	
2	TMA/ Contractors	Provide TRICARE-specific edit/logic changes to 3M	10 days
3	3M	CMS data changes to TRICARE (new codes, APC, SI) Plus Intersection Report	
4	TMA/ Contractors	Provide TRICARE-specific data changes to 3M (APC, SI, edit assignment, …) (see Chapter 13, Addendum A2)	10 days
5	3M	Update TC Working specifications	3 days
6	3M	Write code for TRICARE program logic/edit and product changes: (Component, MF)	5 days
7	3M	Update TC mods files & Build TC Read-Only-Tables	6 days
8	3M	TRICARE Working specs & Data Summary to TRICARE - For Review/Approval	5 days
9	3M	Unit test TC program & product changes - Component, MF (need ROT from step 7)	1 day
10	3M	Build TC ROT #2 … If necessary. (To correct errors or make late CMS changes)	3 days
11	3M	Create User Documentation	12 days
12	3M	Test case creation Alpha testing Install testing	7 days 8 days 2 days
13	3M	Media and Documents production	1 day
14	3M	Release - General Release to TRICARE and Contractors	
NOTE: **The above quarterly time expectations are ideal, but may be subject to change.**			

- END -

CHAPTER 13
ADDENDUM A2

OPPS OCE NOTIFICATION PROCESS FOR QUARTERLY UPDATES

	MCSC: OCE Version: Summary of Data Changes: OCE/APC Working Specification: Effective Date:
4 days (Checklist)	**Review Updates:** 1. HCPC/CPT Procedure Code Changes • Adds/Deletes procedure code • HCPC Changes - APC, Status Indicator and/or Edit Assignment 2. Diagnosis Code Changes • Adds/Deletes diagnosis • Age/Sex Relations 3. Revenue Codes (Appendix K) • Add Revenue Codes • Revenue Code Status Indicator Changes 4. Government No Pay List Updates 5. HCPC Intersection Report (compare SI differences between CMS and TRICARE) 6. Edit Assignment (applicable TRICARE edits) **Impacts:** File format changes ☐ (record layout) — Describe: New values: ☐ — Describe: Policy: ☐ — Manual: TRM — Chapter: — Sections: Manual: TRM — Chapter: — Sections: Manual: TRM — Chapter: — Sections: Comments:
3 days	Gather feedback for all Primes - Prime responsibility for OCE response to 3M will rotate quarterly. • Schedule meeting with Primes • Assigned resource will consolidate feedback using 3M templates
1 day	Submit feedback to TMA • TMA sends to 3M and copies OCE Quarterly Update Team • Notify TMA of changes impacting TRICARE policy
1 day	Meet with 3M on feedback (maintain open date on Thursdays at 11:00 a.m. EDT/EST or 8:00 a.m. Pacific) • Review responses • Address policy impacts (TMA) • Update changes (if needed) • Concur on changes

NOTE: The above quarterly time expectations are ideal, but may be subject to change.

- END -

CHAPTER 13
ADDENDUM A3

APPROVAL OF OPPS - OCE/APC AND NGPL QUARTERLY UPDATE PROCESS

Due to the size and nature of the process, the flowchart can be found on page 2.

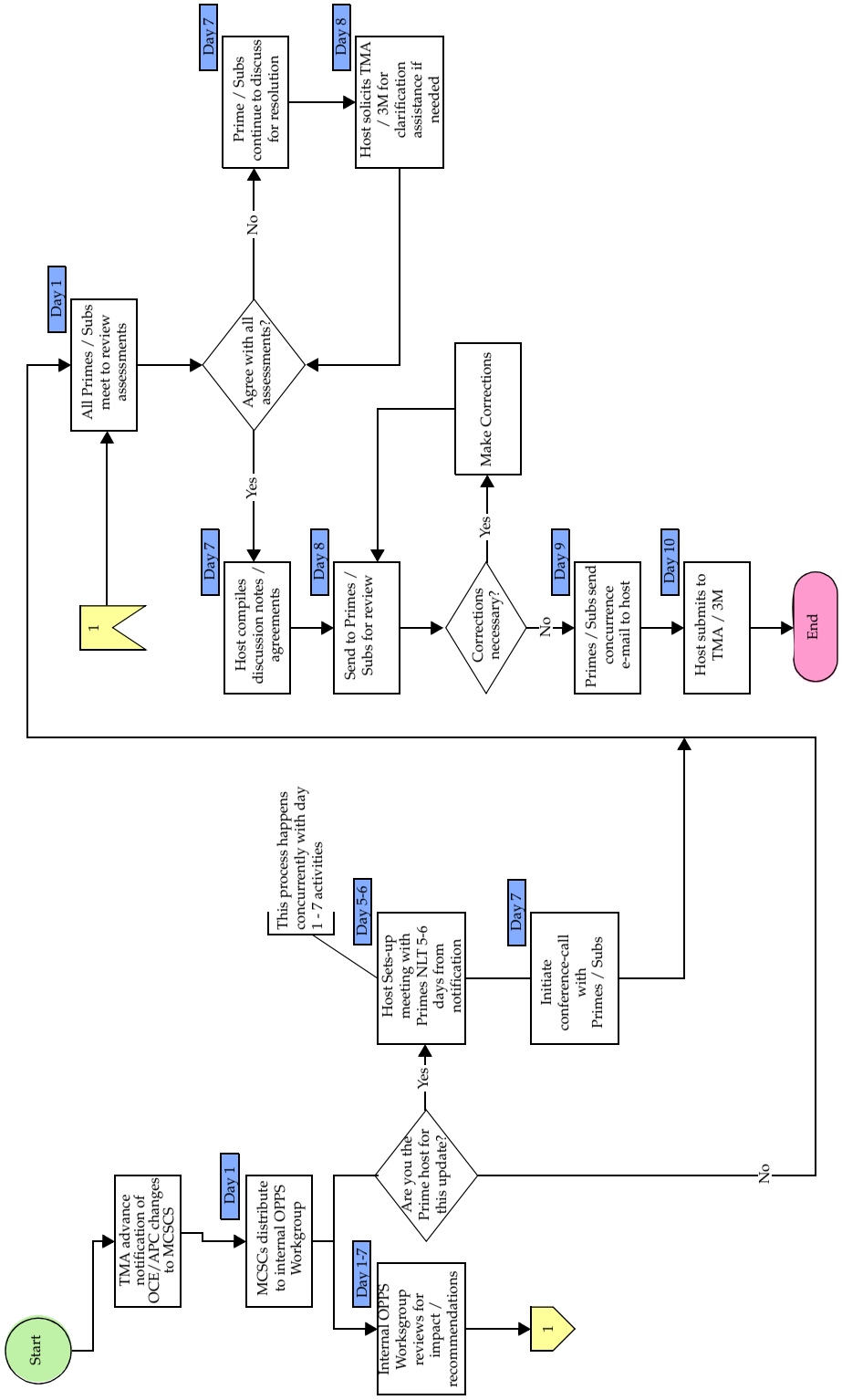
Start
TMA advance notification of OCE/APC changes to MCSCS
Day 1
MCSCs distribute to internal OPPS Workgroup
Day 1-7
Internal OPPS Workgroup reviews for impact / recommendations
1
Are you the Prime host for this update?
Yes
No
This process happens concurrently with day 1 - 7 activities
Day 5-6
Host Sets-up meeting with Primes NLT 5-6 days from notification
Day 7
Initiate conference-call with Primes / Subs
1
Day 1
All Primes / Subs meet to review assessments
Agree with all assessments?
Yes
No
Day 7
Host compiles discussion notes / agreements
Day 7
Prime / Subs continue to discuss for resolution
Day 8
Host solicits TMA / 3M for clarification assistance if needed
Day 8
Send to Primes / Subs for review
Corrections necessary?
Yes
No
Make Corrections
Day 9
Primes / Subs send concurrence e-mail to host
Day 10
Host submits to TMA / 3M
End

- END -

INDEX

	CHAPTER	SECTION
A		
Accommodation Of Discounts Under Provider Reimbursement Methods	1	2
Allowable Charges		
CHAMPUS Maximum Allowable Charges (CMAC)	5	3
Non-Network Providers	5	1
Ambulance Services	1	14
SNF	8	Addendum C
Ambulatory Surgical Center (ASC) Reimbursement On Or Before May 1, 2009 (Implementation Of OPPS), And Thereafter, Freestanding ASCs, And Non-OPPS Facilities Reimbursement	9	1
Anesthesia	1	9
Assistant Surgeons	1	17

INDEX	CHAPTER	SECTION
B		
Benefits And Beneficiary Payments Under The TRICARE Program	2	Addendum A
Birthing Center		
Rate Non-Professional Component	10	Addendum A
Reimbursement	10	1
Bonus Payments In Health Professional Shortage Areas (HPSA) And In Physician Scarcity Areas (PSA)	1	33

INDEX	CHAPTER	SECTION
H		
Health Benefit Program Agreement	6	Addendum A
Home Health Care		
Annual HHA PPS Rate Updates		
CY 2006	12	Addendum L (CY06)
CY 2007	12	Addendum L (CY07)
CY 2008	12	Addendum L (CY08)
Annual HHA PPS Wage Index Updates		
CY 2006	12	Addendum M (CY06)
CY 2007	12	Addendum M (CY07)
CY 2008	12	Addendum M (CY08)
CMS Form 485 - Home Health Certification And Plan Of Care Data Elements	12	Addendum D
Code Table For Converting Julian Dates To Two Position Alphabetic Values	12	Addendum Q
Consolidated Billing Code List		
Non-Routine Supply (NRS) Codes	12	Addendum B
Therapy Codes	12	Addendum C
Coverage And Reimbursement		
Benefits And Conditions For Coverage	12	2
Claims And Billing Submission Under HHA PPS	12	6
General Overview	12	1
Medical Review Requirements	12	8
Pricer Requirements And Logic	12	7
Primary Provider Status And Episodes Of Care	12	5
Prospective Payment Methodology	12	4
Data Elements Used In Determination Of Outlier Payments	12	Addendum N
Decision Logic Used By The Pricer For Episodes Beginning On Or After January 1, 2008	12	Addendum T
Definitions And Acronym Table	12	Addendum A
Diagnoses Associated With Each Of The Diagnostic Categories Used In Case-Mix Scoring (CY 2008)	12	Addendum O
Diagnoses Included In The Diagnostic Categories Used For The Non-Routine Supplies (NRS) Case-Mix Adjustment Model	12	Addendum P
Examples Of Claims Submission Under HHA PPS	12	Addendum R
HAVEN Reference Manual	12	Addendum K
HIPPS Table For Pricer		
For Episodes Beginning On Or After January 1, 2008		
All Five Positions Of HIPPS Code	12	Addendum J3
First Four Positions Of HIPPS Code	12	Addendum J2
For Episodes Beginning Prior To January 1, 2008	12	Addendum J1
Home Health Resource Group (HHRG) Worksheet	12	Addendum I
ICD9-CM Diagnosis Codes For HHRG Assignment	12	Addendum H
Input/Output Record Layout	12	Addendum S

INDEX	CHAPTER	SECTION
H (Continued)		
Home Health Care (Continued)		
OASIS Items Used For Assessments Of 60-Day Episodes Beginning		
On Or After January 1, 2008	12	Addendum G2
Prior To January 1, 2008	12	Addendum G1
Outcome And Assessment Information Set (OASIS-B1)	12	Addendum F
Primary Components Of A Home Care Patient Assessment	12	Addendum E
Hospice Rate Information		
Crosswalk Of Counties By State for FY 2006	11	Addendum D (FY06)
Participation Agreement	11	Addendum E
Rates For Hospice Care		
FY 2007	11	Addendum A (FY07)
FY 2008	11	Addendum A (FY08)
FY 2009	11	Addendum A (FY09)
Reimbursement For Hospice Wage Indexes		
For Rural Areas		
FY 2007	11	Addendum C (FY07)
FY 2008	11	Addendum C (FY08)
FY 2009	11	Addendum C (FY09)
For Urban Areas		
FY 2007	11	Addendum B (FY07)
FY 2008	11	Addendum B (FY08)
FY 2009	11	Addendum B (FY09)
Hospice Reimbursement		
Conditions For Coverage	11	3
Coverage/Benefits	11	2
General Overview	11	1
Guidelines For Payment Of Designated Levels Of Care	11	4
Hospital Reimbursement		
Billed Charges Set Rates	1	21
Locations Outside The 50 United States And The District Of Columbia	1	34
Other Institutional Reimbursement	3	2
Other Than Billed Charges	1	22
Outpatient Services For All Services On Or Before May 1, 2009 (Implementation of OPPS), And Thereafter, For Services Not Otherwise Reimbursed Under Hospital OPPS	1	24
Payment When Only SNF Level Of Care Is Required	1	24

INDEX	CHAPTER	SECTION
O		
Orthotics	1	11
Outpatient Prospective Payment System (OPPS) - Ambulatory Payment Classifications (APCs)		
Approval Of OPPS - OCE/APC And NGPL Quarterly Update Process	13	Addendum A3
Billing And Coding Of Services Under APC Groups	13	2
Claims Submission And Processing Requirements	13	4
Development Schedule For TRICARE OCE/APC Quarterly Update	13	Addendum A1
General	13	1
Medical Review And Allowable Charge Review Under The OPPS	13	5
OCE Notification Process For Quarterly Updates	13	Addendum A2
Prospective Payment Methodology	13	3
Oxygen And Related Supplies	1	12

INDEX	CHAPTER	SECTION
P		
Partial Hospitalization Programs (PHPs)		
Freestanding Psychiatric Reimbursement	7	2
Maximum Rates (FY 2007 - FY 2009)	7	Addendum B
Psychiatric Reimbursement For All Services On Or Before May 1, 2009 (Implementation Of OPPS), And Thereafter, For Services Not Otherwise Reimbursed Under Hospital OPPS	7	2
TRICARE/CHAMPUS Standards For Inpatient Rehabilitation	7	Addendum D
Participation Agreement		
Freestanding Psychiatric Partial Hospitalization Program	7	Addendum J
Hospice Program Services For TRICARE/ CHAMPUS Beneficiaries	11	Addendum E
Hospital-Based Psychiatric Partial Hospitalization Program	7	Addendum I
Residential Treatment Center (RTC)	7	Addendum E
Substance Use Disorder Rehabilitation Facility (SUDRF) Services For TRICARE/CHAMPUS Beneficiaries	7	Addendum C
Payment For Professional/Technical Components Of Diagnostic Services	5	5
Payment Reduction	3	4
Pharmacy Benefits Program - Cost Shares	2	Addendum B
Physician Assistants	1	6
Point Of Service Option	2	3
Postoperative Pain Management	1	10
Preferred Provider Organization (PPO) Reimbursement	1	25
Professional Provider Reimbursement In Specified Locations Outside The 50 United States And The District Of Columbia	1	35
Professional Services, Obstetrical Care	1	18
Prosthetics	1	11

INDEX	CHAPTER	SECTION
P (Continued)		
Psychiatric Hospitals And Units Regional Specific Rates (FY 2007 - FY 2009)	7	Addendum A

INDEX	CHAPTER	SECTION
R		
Reduction Of Payment For Noncompliance With Utilization Review Requirements	1	28
Regional Specific Rates For Psychiatric Hospitals And Units With Low TRICARE Volume (FY 2007 - FY 2009)	7	Addendum A
Reimbursement Administration	3	5
Reimbursement In Teaching Setting	1	4
Reimbursement Of		
Ambulatory Surgical Center On Or Before May 1, 2009 (Implementation Of OPPS), And Thereafter, Freestanding ASCs, And Non-OPPS Facilities Reimbursement	9	1
Assistant Surgeons	1	17
Birthing Center	10	1
Certified Psychiatric Nurse Specialist	1	6
Covered Services Provided By Individual Health Care Professionals And Other Non-Institutional Health Care Providers	1	7
Emergency Inpatient Admissions To Unauthorized Facilities	1	29
Freestanding Ambulatory Surgical Center	9	1
Freestanding and Hospital-Based Birthing Center	10	1
Freestanding Psychiatric Partial Hospitalization Program	7	2
Individual Health Care Professionals And Other Non-Institutional Health Care Providers	3	1
Inpatient Hospital Reimbursement In Locations Outside The 50 United States And The District Of Columbia	1	34
Non-OPPS Facility Surgery Center	9	1
Nurse Practitioners	1	6
Physician Assistants	1	6
Prime Travel Expenses	1	30
Professional Provider Reimbursement In Specified Locations Outside The 50 United States And The District Of Columbia	1	35
Psychiatric Partial Hospitalization Program Reimbursement For All Services On Or Before May 1, 2009 (Implementation Of OPPS), And Thereafter, For Services Not Otherwise Reimbursed Under Hospital OPPS	7	2
Residential Treatment Center (RTC)	7	4

INDEX	CHAPTER	SECTION
S (Continued)		
Substance Use Disorder Rehabilitation Facilities (SUDRFs)		
Reimbursement	7	3
TRICARE/CHAMPUS Standards For Inpatient Rehabilitation	7	Addendum D
Supplemental Insurance	1	26
Surgery	1	16

INDEX	CHAPTER	SECTION
T		
TRICARE/CHAMPUS DRG-Based Payment System		
Adjusted Standardized Amounts		
FY 2007	6	Addendum B (FY07)
FY 2008	6	Addendum B (FY08)
FY 2009	6	Addendum B (FY09)
DRG Weights		
FY 2007	6	Addendum C (FY07)
FY 2008	6	Addendum C (FY08)
FY 2009	6	Addendum C (FY09) .